ZONE 41
MINGUS PUMP STATION, TANK AND PIPELINE
PRESCOTT, ARIZONA
PROJECT NO. CIP: 17-009

FOR CONSTRUCTION

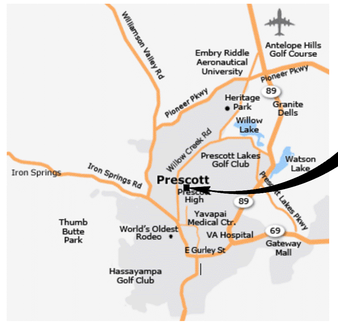

PROJECT LOCATION

N

LOCATION MAP
NTS

UTILITY INFORMATION		
COMPANY	CONTACT	TELEPHONE
ARIZONA PUBLIC SERVICE CO.	SHERYL MCCRACKEN	(928) 776-3636
CENTURYLINK	USIC DISPATCH CENTER	(800) 778-9140
UNISOURCE ENERGY SERVICES	DIANE SWIGART	(928) 771-7229
SPARKLIGHT	DOUG HAMILTON	(928) 713-8382
CITY OF PRESCOTT	BENJAMIN BURNS (SR. INFRASTRUCTURE ANALYST)	(928) 777-1130

Contact Arizona 811 at least two full working days before you begin excavation
ARIZONA811 BLUE STAKE, INC.
Call 811 or click Arizona811.com

CITY OF PRESCOTT ARIZONA

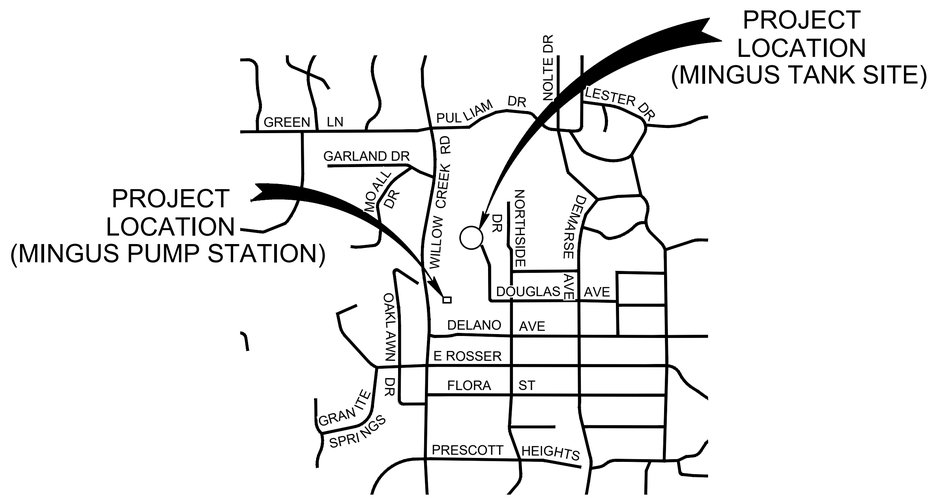

N

VICINITY MAP
NTS

AS-BUILT CERTIFICATION

I HEREBY CERTIFY, TO THE BEST OF MY KNOWLEDGE, INFORMATION AND BELIEF, THAT THIS PROJECT HAS BEEN COMPLETED IN SUBSTANTIAL CONFORMANCE WITH THE APPROVED PLANS, SPECIFICATIONS AND REFERENCED STANDARDS, EXCEPT AS SHOWN HEREON: THAT THESE RECORD DRAWINGS REFLECT THE POSITION OF CONSTRUCTED IMPROVEMENT BASED ON FIELD MEASUREMENTS: AND THAT THE MATERIALS USED IN CONSTRUCTION ARE AS SHOWN BASED ON FIELD OBSERVATION AND TEST RESULTS.

THIS CERTIFICATION DOES NOT WARRANT MATERIALS, WORKMANSHIP, METHODS OF CONSTRUCTION, OR OTHER ITEMS AFFECTING THE WARRANTY OF THIS PROJECT, TO THE CITY OF PRESCOTT. USERS OF THIS INFORMATION ARE ADVISED TO OBTAIN INDEPENDENT VERIFICATION OF ACTUAL CONDITIONS.

REGISTERED PROFESSIONAL ENGINEER (CIVIL) — DATE

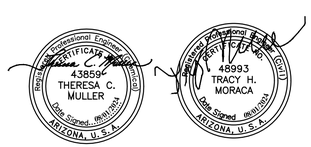

MAYOR

PHIL GOODE

CITY COUNCIL

CONNIE CANTELME
ERIC MOORE
CATHEY RUSING (MAYOR PRO TEM)
BRANDON MONTOYA
LOIS FURHWIRTH
TED GAMBOGI

Brown AND Caldwell
2 N CENTRAL AVE
SUITE 1600
PHOENIX, AZ 85004

REVIEWED BY

CITY OF PRESCOTT PUBLIC WORKS — 08/02/2024 DATE

SUBMITTED BY

PROJECT ENGINEER — 08/01/2024 DATE

AZ 43859
AZ REGISTRANT NO.

SURVEYOR INFORMATION

CHRISTOPHER J KIMBALL — 48100

REGISTRANT UNDER WHOSE SUPERVISION THE SURVEY INFORMATION WAS OBTAINED — REGISTRATION NUMBER

DRAWING INDEX:

SHEET NO.	DWG. NO.	DRAWING TITLE
		GENERAL
1	G-0	COVER SHEET
2	G-1	DRAWING INDEX
3	G-2	NOTES, SYMBOLS, DESIGNATOINS AND ABBREVIATIONS
4	G-3	HORIZONTAL CONTROL PLAN
5	G-4	RESULTS OF POTHOLE PLAN
		DEMOLITION
6	D-100	PUMP STATION DEMOLITION
7	D-101	TANK DEMOLITION
		CIVIL
8	C-001	SECTIONS AND DETAILS
9	C-002	GENERAL NOTES 1
10	C-003	GENERAL NOTES 2
11	C-004	STANDARD DETAILS 1
12	C-005	STANDARD DETAILS 2
13	C-006	STANDARD DETAILS 3
14	C-007	TEMPORARY EROSION CONTROL/SWPP PLAN
15	C-100	PLAN PROFILE - WATER MAIN PUMP STATION SUCTION PIPE & NEW 4-INCH WATER
16	C-101	PLAN PROFILE - DOUGLAS AVENUE BEGIN - STA 84+00
17	C-102	PLAN PROFILE - WATER MAIN DOUGLAS AVE STA 84+00 - 86+40
18	C-103	PLAN PROFILE - WATER MAIN DOUGLAS AVE STA 86+40 - 88+20
19	C-104	PLAN PROFILE - WATER MAIN DOUGLAS AVE STA 88+20 - END
20	C-105	WATER MAIN PLAN - MINGUS AVENUE WATER MAIN ABANDONMENT
21	C-106	PLAN PROFILE - TANK SITE ROAD AND WATER MAIN BEGIN - STA 43+50
22	C-107	PLAN PROFILE - TANK SITE ROAD AND WATER MAIN STA 43+50 - END
23	C-201	PLAN PROFILE - ROAD CONSTRUCTION DOUGLAS AVENUE
24	C-202	SITE DRAINAGE IMPROVEMENTS
25	C-301	PUMP STATION SITE GRADING PLAN
26	C-302	TANK SITE GRADING PLAN
		STRUCTURAL
27	S-001	GENERAL STRUCTURAL NOTES
28	S-002	GENERAL STRUCTURAL NOTES CONT. AND TYPICAL DETAILS T-SERIES
29	S-004	FOUNDATION PLAN
30	S-005	ROOF FRAMING PLAN
31	S-006	FOUNDATION DETAILS 100-SERIES
		ARCHITECTURAL
32	CS-101	CODE SUMMARY
33	A-101	FLOOR PLAN
34	A-102	REFLECTED CEILING PLAN
35	A-103	ROOF PLAN
36	A-201	ELEVATIONS 1
37	A-202	ELEVATIONS 2
38	A-301	SECTIONS
39	A-601	DOOR SCHEDULE AND DETAILS

DRAWING INDEX:

SHEET NO.	DWG. NO.	DRAWING TITLE
		MECHANICAL
40	M-001	MECHANICAL STANDARD DETAILS 1
41	M-002	MECHANICAL STANDARD DETAILS 2
42	M-003	MECHANICAL STANDARD DETAILS 3
43	M-004	MECHANICAL STANDARD DETAILS 4
44	M-005	MECHANICAL STANDARD DETAILS 5
45	M-100	PUMP STATION PLAN
46	M-101	PUMP STATION SECTIONS AND DETAILS
47	M-102	SECTION AND DETAILS
48	M-103	TANK PLAN AND SECTION
49	M-104	TANK SECTION AND DETAILS
50	M-110	WATER MAIN PROCESS FLOW DIAGRAM
51	M-200	DETAILS
		HVAC
52	MH-001	SYMBOLS, ABBREVIATIONS, AND NOTES
53	MH-002	DETAILS
54	MH-003	EQUIPMENT SCHEDULES
55	MH-100	FLOOR PLAN AND AIR FLOW SCHEMATICS
		ELECTRICAL
56	E-001	LEGENDS AND SYMBOLS SHEET 1
57	E-002	LEGENDS AND SYMBOLS SHEET 2
58	E-003	ABBREVIATIONS
59	E-101	PUMP STATION SITE PLAN
60	E-401	PUMP STATION ENLARGED PLAN
61	E-402	PUMP STATION LIGHTING PLAN
62	E-411	TANK SITE PLAN
63	E-501	STANDARD DETAILS 1
64	E-502	STANDARD DETAILS 2
65	E-503	STANDARD DETAILS 3
66	E-504	STANDARD DETAILS 4
67	E-505	STANDARD DETAILS 5
68	E-506	STANDARD DETAILS 6
69	E-601	PUMP STATION SINGLE LINE DIAGRAM
70	E-602	PUMP STATION LOAD SUMMARY AND SCHEDULES
71	E-603	PUMP STATION CONTROL SINGLE LINE DIAGRAM
72	E-605	SCHEMATIC DIAGRAMS - BOOSTER PUMPS
73	E-606	SCHEMATIC DIAGRAMS - MISCELLANEOUS
74	E-611	TANK SINGLE LINE DIAGRAM AND SCHEDULES
		INSTRUMENTATION
75	I-001	LEGENDS AND SYMBOLS - 1
76	I-002	LEGENDS AND SYMBOLS - 2
77	I-003	LEGENDS AND SYMBOLS - 3
78	I-004	ABBREVIATIONS
79	I-601	ZONE 0 PARTIAL - PROCESS AND INSTRUMENTATION DIAGRAM
80	I-602	BOOSTER PUMPS - PROCESS AND INSTRUMENTATION DIAGRAM
81	I-603	JOCKEY PUMP - PROCESS AND INSTRUMENTATION DIAGRAM
82	I-604	SURGE TANK - PROCESS AND INSTRUMENTATION DIAGRAM
83	I-605	SUPPORT SYSTEMS - PROCESS AND INSTRUMENTATION DIAGRAM
84	I-611	MINGUS TANK - PROCESS AND INSTRUMENTATION DIAGRAM

Brown AND Caldwell
2 N CENTRAL AVE
SUITE 1600
PHOENIX, AZ 85004

FOR CONSTRUCTION

Registered Professional Engineer
CERTIFICATE NO.
43859
THERESA C. MULLER
Date Signed
ARIZONA, U.S.A.

CITY OF PRESCOTT
ARIZONA

ZONE 41 PUMP STATION, TANK AND PIPELINE

REVISIONS

REV	DATE	DESCRIPTION

LINE IS 2 INCHES
AT FULL SIZE

DESIGNED: MWS
DRAWN: SCP
CHECKED: NW
CHECKED:
APPROVED: TM

FILENAME
152624-G-1.DWG
BC PROJECT NUMBER
152624
CLIENT PROJECT NUMBER
17-009

GENERAL

DRAWING INDEX

DRAWING NUMBER
G-1
SHEET NUMBER
2 OF 84

Path: C:\BCPWD0474245 FILENAME: 152624-G-1.DWG PLOT DATE: 7/29/2022 1:24 PM CAD USER: ANSON COX
COP1.png

GENERAL

	NEW FACILITIES (SOLID)	@	AT
	EXISTING (OR SCREENED)	&	AND
	MATCH LINE	Ø	ROUND OR DIAMETER
	CENTERLINE	±	PLUS/MINUS
	FUTURE IMPROVEMENTS	∠	ANGLE
	RIGHT OF WAY	2 or 2	KEY NOTE DESIGNATION

CIVIL

NATURAL GROUND OR GRADE	
8" W	WATER LINE TO BE ABANDONED
8" S	SEWER LINE (SIZE AS NOTED)
8" W	WATER LINE (SIZE AS NOTED)
G	GAS LINE
E	ELECTRIC LINE
OHE	OVERHEAD ELECTRIC LINE
T	TELEPHONE LINE
4" F	FIRE LINE (SIZE AS NOTED)
X X	FENCE
1127	EXISTING GRADE CONTOURS (OR SCREENED)
1127	FINISH GRADE CONTOURS
× 1127.57	FINISH GRADE SPOT ELEVATION
	RIP RAP
	PROPERTY LINE
	MAILBOX
	PVC CONDUIT WARNING SIGN
	TELEPHONE RISER
	CABLE TELEVISION BOX
	WATER METER BOX
P	ELECTRIC VAULT
	ELECTRIC TRANSFORMER
T	TELEPHONE/ELECTRIC MANHOLE
SD	STORM DRAIN MANHOLE
	HISTORICAL SITE
	MAILBOX

XXX	SOIL BORING AND DESIGNATION
	FIRE HYDRANT
	BURIED VALVE
MH	MANHOLE
SS	SANITARY SEWER MANHOLE
CB	CATCH BASIN OR INLET
	UTILITY POLE
	SURVEY MONUMENT
	SURVEY CONTROL POINT
B1	PERMANENT BENCHMARK
N = 1000.00 E = 1000.00	COORDINATES
	BRASS CAP AS NOTED
	POWER POLE
	GUY WIRE
	SIGN
E	ELECTRIC METER
WV	WATER VALVE
	WATER METER
	COMMON SECTION CORNER
	HANDRAIL
	RPZ ASSEMBLY
	CLEANOUT
	SEWER BACKWATER VALVE
	GAS METER
	UTILITY POLE

MECHANICAL

PIPE AND FITTINGS

SINGLE LINE	DOUBLE LINE	
		FLANGED JOINT
		PLAIN OR GROOVED END MECHANICAL COUPLING
		PUSH ON, MECHANICAL OR BELL AND SOCKET JOINT
		WELDED JOINT
		SLEEVE TYPE MECHANICAL COUPLING
		RESTRAINED SLEEVE TYPE MECHANICAL COUPLING
		FLANGED COUPLING ADAPTER
		RESTRAINED FLANGED COUPLING ADAPTER
		GROOVED END ADAPTER FLANGE
		UNION

SINGLE LINE	DOUBLE LINE	
		ELASTOMER AND FABRIC EXPANSION JOINT
		EXPANSION JOINT (SEE SPECS FOR TYPE)
		FLEXIBLE METAL HOSE
		BEND UP
		BEND DOWN
		TEE UP
		TEE DOWN
		LATERAL UP
		LATERAL DOWN
		CONCENTRIC REDUCER
		ECCENTRIC REDUCER

SURVEY

	CACTUS		BIKE LANE
	FLAG		TRAFFIC SIGNAL
	GRID TICK		HANDICAP
+	AERIAL PANELS	EXIT STOP	TRAFFIC PAINT
	PALM TREE	NEED ONLY YIELD	TRAFFIC PAINT
	OAK TREE		MINE
	CYPRESS TREE		BUILDING
	PEDESTRIAN SIGNAL		BRIDGE
			CANOPY
	CULVERT		CENTER LINE PAINT
P	POST- MISC		CONCRETE
2080.5	SPOT ELEVATION	3560	ELEVATION TEXT
	BILLBOARD		CURB / GUTTER
	TRANSMISSION		DIRT ROAD / TRAIL
	BRIDGE SIGNS		GOLF FAIRWAY
	CATCH BASIN	x x x x	FENCE
FH	FIRE HYDRANT	N 80000	GRID TEXT
	METER / UTILITY	3130	INDEX CONTOUR
MH	MANHOLE		INTER CONTOUR
	STREET LIGHT		ASPHALT PAVEMENT
	LIGHT POLE		
	UTILITY POLE		SWIMMING POOL
	SIGNS		RETAINING WALL
	SIGNS		PAVED ROAD
	TV DISH		RAILROAD
	STREET SIGN		VEGETATION LINE
	GATE		GUARD RAIL
	VALVE		PARKING STRIPES
	ARROW / STRAIGHT		WASH
	ARROW / TURNS		STORM DRAIN PIPE
	ARROWS / TURNS		

ABBREVIATIONS:

CMP	CORRUGATED METAL PIPE
COP	CITY OF PRESCOTT
EC	EXISTING CONCRETE ELEVATION
EG	EXISTING GROUND ELEVATION
EL	ELEVATION
EP	EXISTING PAVEMENT
ETC	EXISTING TOP OF CURB
EX	EXISTING
FC	FINISHED CONCRETE ELEVATION
FF	FINISHED FLOOR ELEVATION
FG	FINISHED GRADE ELEVATION
FL	FLOWLINE ELEVATION
G	GAS
G/B	GRADE BREAK
GV	GATE VALVE
H/P	HIGH POINT
ID	INSIDE DIAMETER
INV	INVERT
L/P	LOW POINT
MAG	MARICOPA ASSOCIATION OF GOVERNMENTS
MH	MANHOLE
MIN	MINIMUM
OD	OUTSIDE DIAMETER
P	PAVEMENT OR FINISHED SURFACE
PUE	PUBLIC UTILITY EASEMENT
ROW	RIGHT OF WAY
S	SEWER
S=	SLOPE
SD	STANDARD DETAIL
STA	STATION
TC	TOP OF CURB
TW	TOP OF WALL
TYP	TYPICAL
W	WATER
YAG	YAVAPAI ASSOCIATION OF GOVERNMENTS

SURVEY

1. NOT ALL SYMBOLS SHOWN HEREON WILL BE USED IN THIS SET OF CONTRACT DRAWINGS.
2. SEE EACH DISCIPLINE DRAWINGS FOR ADDITIONAL SYMBOLS, AND ABBREVIATIONS.
3. SYMBOLS ARE ARRANGED ON SPECIFIC DRAWINGS AND IN CATEGORIES FOR CONVENIENCE ONLY; SYMBOLS MAY BE USED ON ANY OF THE CONTRACT DRAWINGS.

VALVES

	THREE WAY VALVE
	GATE VALVE (NORMALLY OPEN)
	GATE VALVE (NORMALLY CLOSED)
	PLUG VALVE (NORMALLY OPEN)
	PLUG VALVE (NORMALLY CLOSED)
	BALL VALVE (NORMALLY OPEN)
	BALL VALVE (NORMALLY CLOSED)
	BUTTERFLY VALVE
	GLOBE VALVE
	DIAPHRAGM VALVE
	ANGLE VALVE
	FLOAT VALVE
	PINCH VALVE
	NEEDLE VALVE
	DOUBLE LEAF CHECK VALVE
	IN-LINE, SPRING LOADED RELIEF VALVE
	PRESSURE REGULATING VALVE
	BACK PRESSURE REGULATING VALVE
S	SOLENOID VALVE
	MUD VALVE
	CHECK VALVE
	BALL CHECK VALVE
	PUMP DISCHARGE VALVE
	GAUGE OR ROOT VALVE
	KNIFE GATE VALVE
	FLAP GATE
	BALANCING COCK
	CIRCUIT SETTER
	THERMOSTATICALLY CONTROLLED VALVE
	PRESSURE AND VACUUM RELIEF VALVE
	VACUUM RELIEF VALVE
	PRESSURE RELIEF VALVE
	DIAPHRAGM OPERATED VALVE
	PRESSURE BALANCE OPERATED VALVE
M	MOTOR OPERATED VALVE
	PISTON OPERATED VALVE
	CHLORINE INSTITUTE CONTAINER VALVE

DRAWING NUMBERING SYSTEM

AS FOLLOWS:
THE DRAWINGS ARE SUBDIVIDED BY DISCIPLINE

G	GENERAL
C	CIVIL
D	DEMOLITION
M	MECHANICAL
MH	HVAC
S	STRUCTURAL
E	ELECTRICAL
I	INSTRUMENTATION
A	ARCHITECTURAL

PIPING DESIGNATIONS

PROPOSED

PIPING IS CALLED OUT BY SIZE FOLLOWED BY PIPING MATERIAL, ENCLOSED AS SHOWN:

24" S

PIPE SIZE
PIPING MATERIAL

*EXISTING

24" S

* PIPING SYSTEM DESIGNATIONS FOR EXISTING PIPE INDICATE PIPE MATERIALS USED.

PIPING SYSTEM DESIGNATIONS

C	CONDUIT	RW	RECLAIMED WATER
D	DRAIN	SD	STORM DRAIN
E	ELECTRIC	S	SANITARY SEWER
G	GAS	W	POTABLE WATER
IRR	IRRIGATION		

Brown AND Caldwell
2 N CENTRAL AVE
SUITE 1600
PHOENIX, AZ 85004

FOR CONSTRUCTION

Registered Professional Engineer (Civil) CERTIFICATE 43859 THERESA C. MULLER Date Signed 10/19/2021 ARIZONA, U.S.A.

CITY OF PRESCOTT ARIZONA

ZONE 41 PUMP STATION, TANK AND PIPELINE

REVISIONS

REV	DATE	DESCRIPTION

LINE IS 2 INCHES AT FULL SIZE

DESIGNED: MWS
DRAWN: SCP
CHECKED: NW
CHECKED:
APPROVED: NW

FILENAME 152624-G-2.DWG
BC PROJECT NUMBER 152624
CLIENT PROJECT NUMBER 17-009

GENERAL

NOTES, SYMBOLS, DESIGNATION AND ABBREVIATIONS

DRAWING NUMBER

G-2

SHEET NUMBER 3 OF 84

Path: C:\BCPWD\0474245 FILENAME: 152624-G-2.DWG PLOT DATE: 8/11/2023 10:08 AM CAD USER: ANSON COX
COP1.png

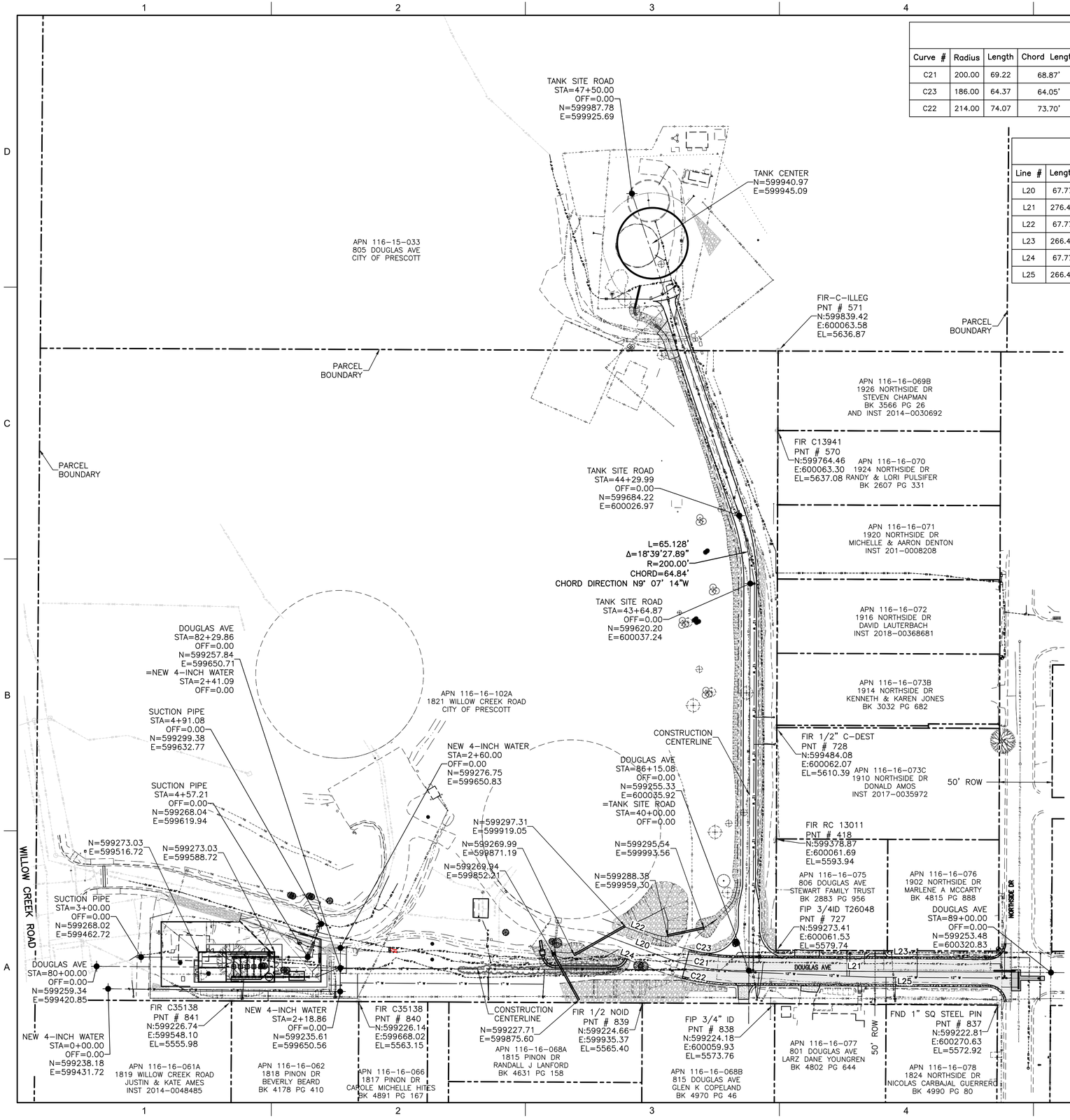

Curve Table: Alignments

Curve #	Radius	Length	Chord Length	Chord Direction	Start Point	End Point	Start Sta	ALIGNMENT
C21	200.00	69.22	68.87'	S79° 42' 43.89"E	(E=599956.61,N=599267.71)	(E=600024.37,N=599255.41)	49+79.24	DOUGLAS PAVEMENT DESIGN
C23	186.00	64.37	64.05'	S79° 42' 43.89"E	(E=599961.44,N=599280.85)	(E=600024.46,N=599269.41)	59+80.69	DOUGLAS NORTH BOC
C22	214.00	74.07	73.70'	S79° 42' 43.89"E	(E=599951.77,N=599254.57)	(E=600024.28,N=599241.41)	69+77.78	DOUGLAS SOUTH BOC

Line Table: Alignments

Line #	Length	Direction	Start Point	End Point	Start Sta	ALIGNMENT
L20	67.77	S69° 47' 49.88"E	(E=599893.01,N=599291.11)	(E=599956.61,N=599267.71)	49+11.47	DOUGLAS PAVEMENT DESIGN
L21	276.47	S89° 37' 37.90"E	(E=600024.37,N=599255.41)	(E=600300.83,N=599253.61)	50+48.46	DOUGLAS PAVEMENT DESIGN
L22	67.77	S69° 47' 49.88"E	(E=599897.84,N=599304.25)	(E=599961.44,N=599280.85)	59+12.92	DOUGLAS NORTH BOC
L23	266.47	S89° 37' 37.90"E	(E=600024.46,N=599269.41)	(E=600290.92,N=599267.67)	60+45.06	DOUGLAS NORTH BOC
L24	67.77	S69° 47' 49.88"E	(E=599888.17,N=599277.97)	(E=599951.77,N=599254.57)	69+10.01	DOUGLAS SOUTH BOC
L25	266.47	S89° 37' 37.90"E	(E=600024.28,N=599241.41)	(E=600290.74,N=599239.68)	70+51.85	DOUGLAS SOUTH BOC

SURVEY DATUM:

THIS PLAN SET AND THE SURVEY ON WHICH THEY ARE BASED IS RELATIVE TO THE CITY OF PRESCOTT SURVEY DATUM.

LINEAR UNIT: INTERNATIONAL FEET (IFT)

HORIZONTAL DATUM RELATIVE TO THE CITY OF PRESCOTT GRID COORDINATE SYSTEM (NAD83)
COORDINATE SYSTEM PARAMETERS:

- SYSTEM: CITY OF PRESCOTT LDP (LOW DISTORTION PROJECTION)
- PROJECTION: TRANSVERSE MERCATOR
- LATITUDE OF GRID ORIGIN: 31°00'00.00000" N
- LONGITUDE OF CENTRAL MERIDIAN: 111°55'00.0000"W
- NORTHING AT GRID ORIGIN: -701,456.00878967 IFT
- EASTING AT CENTRAL MERIDIAN: 769,688.232571722 IFT
- CENTRAL MERIDIAN SCALE FACTOR: 1.000 229 942 0025

SURVEY CONDUCTED UNDER THE DIRECTION OF
CHRISTOPHER JOHN KIMBALL, RLS #48100
USING GPS REFERENCED TO THE ARIZONA COORDINATE SYSTEM, 1983 UTILIZING REAL-TIME KINEMATIC (RTK) GPS METHODS AND PROCEDURES WITH RTK GPS OBSERVATION CORRECTIONS PROVIDED BY THE CITY OF PRESCOTT MINGO BASE COBS.

SPECIAL NOTE:

EVERY EFFORT SHALL BE MADE TO PRESERVE AND PROTECT ALL EXISTING MONUMENTS IN PLACE. IN THE EVENT THAT A MONUMENT IS DAMAGED OR CANNOT BE PRESERVED, THE MONUMENT SHALL BE REPLACED.

ABBREVIATION LEGEND

C#	CAP WITH LS NUMBER
C-DEST	CAP DESTROYED
C-ILLEG	CAP ILLEGIBLE
E	EASTING
EL	ELEVATION
FIP	FOUND IRON PIPE
FIR	FOUND IRON REBAR
FND	FOUND
ID	INNER DIAMETER
LS	LAND SURVEY(OR)
N	NORTHING
NOID	NO IDENTIFICATION
PNT	POINT
SQ	SQUARE
T#	TAG WITH LS NUMBER

Brown AND Caldwell

FOR CONSTRUCTION

Registered Professional Engineer (Civil)
22880
GARY R.
KELLEY
Date signed 8/9/23
ARIZONA, U.S.A.

CITY OF PRESCOTT ARIZONA

ZONE 41 PUMP STATION, TANK AND WATER MAIN

REVISIONS

REV	DATE	DESCRIPTION

LINE IS 2 INCHES AT FULL SIZE

DESIGNED: BWT
DRAWN: BWT
CHECKED: GRK
CHECKED:
APPROVED:

KWE PROJECT NUMBER 18-081
BC PROJECT NUMBER 152624
CLIENT PROJECT NUMBER CIP #17-009

HORIZONTAL CONTROL PLAN ZONE 41

DRAWING NUMBER
G-3

SHEET NUMBER
4 OF 84

Path: X:\KWE\PROJECTS\2018\18081 ZONE 41 FILENAME: 18081 HOR CONTROL SHEETS.DWG PLOT DATE: 8/9/2023 5:16 PM CAD USER: USER

POTHOLE SUMMARY

TWENTY-TWO POTHOLES WERE PERFORMED BY ERC. THREE OF THOSE POTHOLES WERE NOT SUCCESSFUL IN LOCATING THE UTILITY BEING SEARCHED FOR. EACH TIME THE POTHOLE WAS UNSUCCESSFUL, THE TARGET UTILITY WAS THE EXISTING 20" ACP WATER LINE. CIVIL DESIGN AND AS-BUILT PLANS INDICATE THAT LINE IS GREATER THAN 12-FEET DEEP AT THE LOCATIONS WHERE POTHOLES WERE PERFORMED. THE DEPTH OF THE POTHOLES WAS TERMINATED BETWEEN EIGHT AND NINE FEET DEEP. THE RESULTS OF SURVEY BASED ON THE POTHOLE DATA IS PLOTTED HEREON.

MULTIPLE UTILITIES WHERE FOUND IN SEVERAL POTHOLES. POTHOLE POINTS 3316, 3323, 3324 AND 3325 ARE ALL POINTS IN THE SAME POTHOLE. POTHOLE POINTS 3317, 3320, 3321 AND 3322 ARE ALL POINTS IN THE SAME POTHOLE. POTHOLE POINTS 3318 AND 3319 ARE BOTH POINTS IN THE SAME POTHOLE. POTHOLE POINTS 3356 AND 3357 ARE BOTH POINTS IN THE SAME POTHOLE. POTHOLE POINTS 3359 AND 3360 ARE BOTH POINTS IN THE SAME POTHOLE.

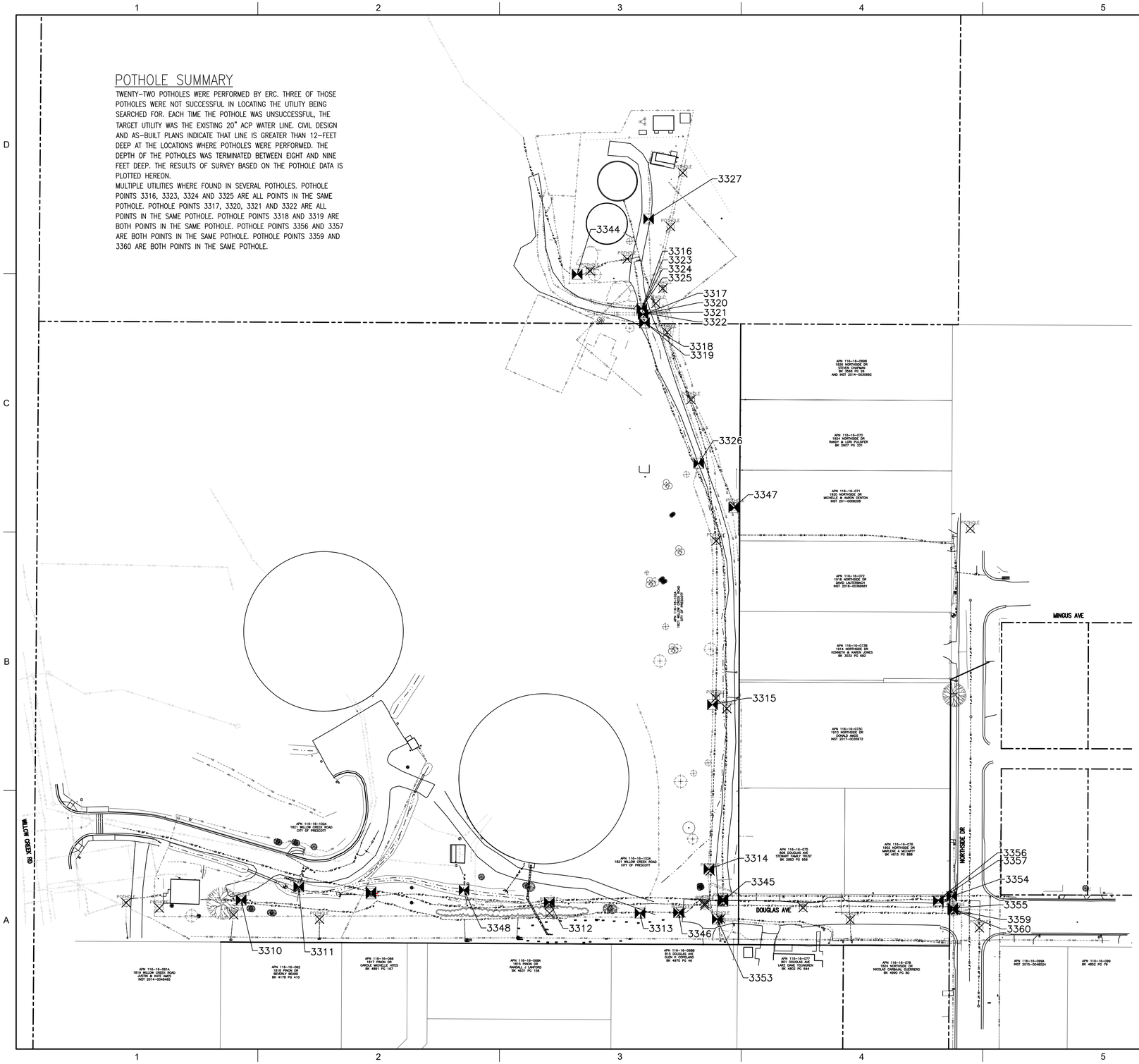

Point Table				
Point #	Elevation	Northing	Easting	Description
3310	5549.20	599268.15	599568.38	AB T/EX ACP H2O
3311	5546.08	599281.43	599625.42	AB T/EX DIP H2O
3312	5571.85	599266.08	599873.84	AB T/EX PVC H2O
3313	5572.89	599255.34	599963.77	AB T/EX 6" DIP H2O
3314	5579.20	599299.05	600032.10	AB T/EX GAS 1" STEEL
3315	5605.12	599462.00	600035.60	AB T/EX GAS 1" STEEL
3316	5647.67	599854.88	599965.67	AB T/8" PVC H2O
3317	5647.27	599848.79	599966.88	AB T/8" PVC H2O
3318	5646.60	599840.41	599968.28	AB T/8" PVC H2O
3319	5648.87	599840.87	599968.79	AB T/2" COMM
3320	5648.00	599849.28	599966.96	AB T/4" COMM
3321	5648.06	599850.07	599966.96	AB T/4" COMM
3322	5648.09	599850.51	599966.90	AB T/4" COMM
3323	5648.42	599853.63	599965.64	AB T/2" COMM
3324	5648.57	599854.54	599965.50	AB T/3" COMM
3325	5649.32	599855.40	599965.43	AB T/4" COMM
3326	5638.54	599701.18	600021.99	AB T/1" STEEL GAS
3327	5657.21	599943.45	599972.29	AB T/1" STEEL GAS
3344	5652.07	599888.58	599901.50	T/EX 6" DIP
3345	5579.15	599267.18	600046.06	AB T/EX 8" PVC -2.95 TOP
3346	5577.41	599255.85	600002.01	AB T/EX 6" DIP -3.1 TOP
3347	5628.41	599657.53	600056.71	AB T/6" ACP H2O
3348	5573.57	599278.26	599789.39	AB PH -9.0 NOTHING
3353	5574.92	599249.39	600040.33	AB T/EX 1" GAS
3354	5578.31	599272.05	600272.88	AB -3.0 T/6"TS&V ACP
3355	5576.92	599260.46	600273.80	AB -3.2 T/8" CROSS PVC
3356	5575.55	599268.45	600259.55	AB T/2" DIP?
3357	5577.57	599267.59	600259.60	AB -8.0 NOTHING
3359	5573.71	599258.42	600274.03	AB T/EX 8" CAP
3360	5575.70	599259.10	600274.30	AB E/EX VLV CAN

SYMBOL LEGEND

POTHOLE – FIELD EXPLORATION HOLE DUG

POTHOLE ORIGINALLY PROPOSED POTHOLE – NO HOLE DUG

N

50' 25' 0 50' 100'

SCALE:1"=50'

SPECIAL POTHOLE NOTE:

THE PROPOSED POTHOLE LOCATIONS SHOWN HEREON SHALL NOT BE COMPLETED UNTIL THE INTENDED LOCATION IS FIELD VERIFIED BY BLUESTAKE MARKINGS AND THE ENGINEER'S APPROVED FIELD LOCATION IS CONFIRMED.

Brown AND Caldwell

FOR CONSTRUCTION

Registered Professional Engineer (Civil) CERTIFICATE NO. 22880 GARY R. KELLEY Date signed 8/9/23 ARIZONA, U.S.A.

CITY OF PRESCOTT ARIZONA

ZONE 41 PUMP STATION, TANK AND WATER MAIN

REVISIONS		
REV	DATE	DESCRIPTION

LINE IS 2 INCHES AT FULL SIZE

DESIGNED:	BWT
DRAWN:	BWT
CHECKED:	GRK
CHECKED:	
APPROVED:	

KWE PROJECT NUMBER 18-081

BC PROJECT NUMBER 152624

CLIENT PROJECT NUMBER CIP #17-009

RESULTS OF POTHOLE PLAN ZONE 41

DRAWING NUMBER

G-4

SHEET NUMBER 5 OF 84

Path: X:\KWE\PROJECTS\2018\18081 ZONE 41 FILENAME: 18081 POTHOLE PLAN.DWG PLOT DATE: 8/9/2023 5:16 PM CAD USER: USER

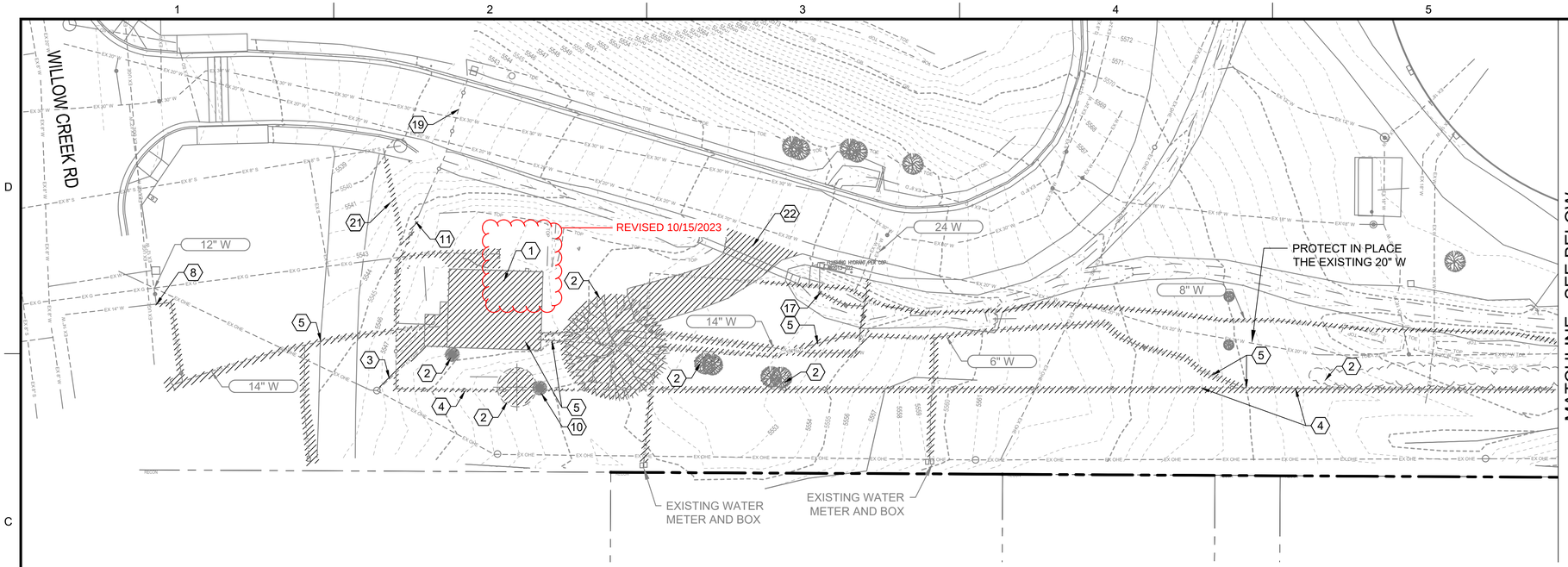

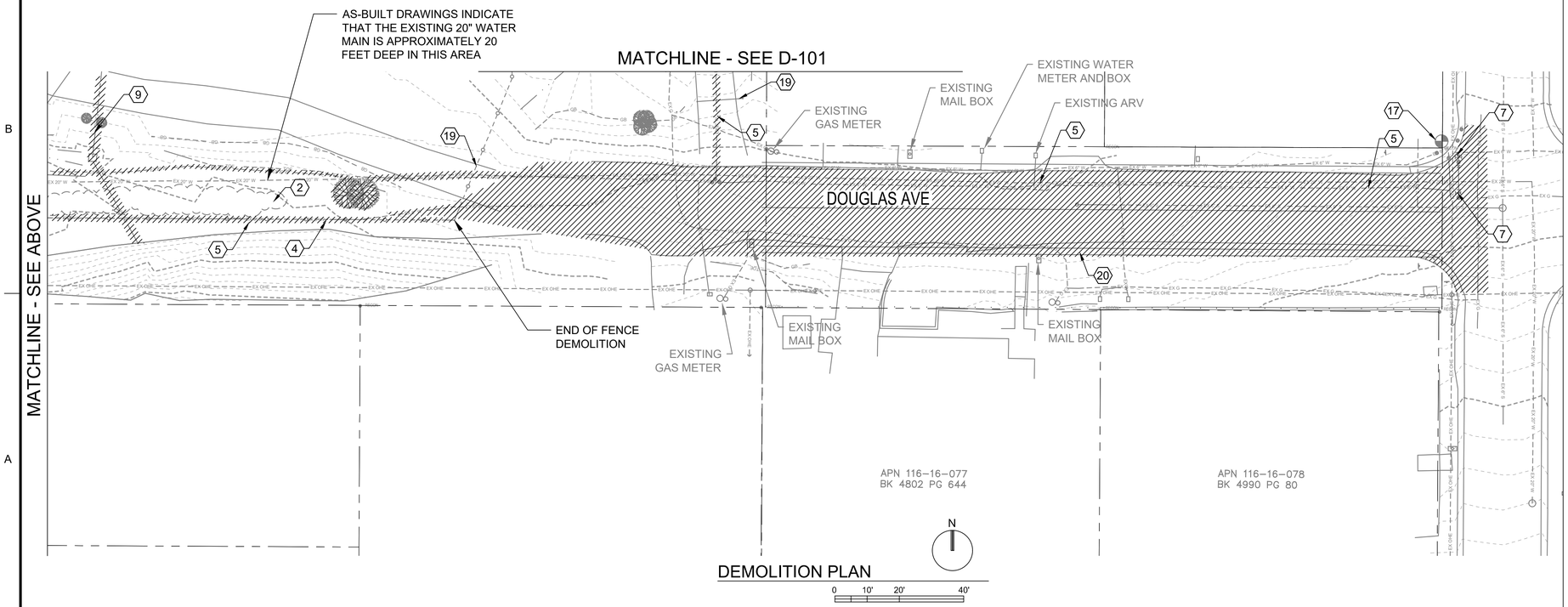

GENERAL NOTES

1. DEMOLITION WORK SHALL BE SEQUENCED AND COMPLETED ACCORDING TO CONTRACT SPECIFICATIONS. EXISTING PUMP STATION WILL BE DEMOLISHED AFTER THE NEW PUMP STATION PUMP ROOM AND ELECTRICAL ROOM ARE COMPLETE AND OPERATIONAL.
2. REFERENCE SPECIFICATION 02 41 13 FOR ITEMS TO BE SALVAGED. CONTRACTOR SHALL ALSO VERIFY WITH OWNER EQUIPMENT TO BE SALVAGED.
3. EXISTING UTILITY INFORMATION AND LOCATIONS SHOWN ON THESE DRAWINGS WERE OBTAINED FROM AS-BUILT DRAWINGS, BLUESTAKE, POTHOLING AND FROM THE CITY. THERE MAYBE CONFLICTING INFORMATION. CONTRACTOR TO VERIFY EXISTING UTILITY LOCATIONS PRIOR TO DEMOLITION.
4. ARIZONA PUBLIC SERVICE POWER UTILITY ADDRESS: 812 DOUGLAS AVENUE.

KEY NOTES

1. EXISTING PUMP STATION AND GENERATOR TO BE DEMOLISHED, SEE GENERAL NOTE 1
2. VEGETATION/TREES TO BE REMOVED
3. COORDINATE ELECTRICAL UTILITY DEMOLITION WITH UTILITY COMPANY
4. EXISTING FENCING TO BE REMOVED. SEE DRAWING C-301 FOR LOCATION OF NEW FENCE AND CONNECTION OF NEW FENCE TO EXISTING
5. EXISTING WATERLINE TO BE REMOVED.
6. CUT/REMOVE WATERLINE TO EXISTING PUMP STATION
7. EXISTING WATERLINE TO BE REMOVED UP TO POINT OF NEW 12" W TIE-IN
8. RESTRAINED CAP ON TEE
9. REMOVE EXISTING 18" CMP, CATCH BASIN AND GRATE
10. REMOVE WATERLINE UP TO METER BOXES WHERE NEW WATERINE CONNECTS PER C-100
11. EXISTING FENCE TO REMAIN. PROTECT IN PLACE
12. DEMOLISH EXISTING TANK PIPING AND APPURTENANCES
13. EXISTING 200,000 GALLON STEEL TANK AND FOUNDATION TO BE REMOVED
14. CONNECT TO NEW WATERLINE. SEE DWG C-107
15. EXISTING FENCING TO BE REMOVED. SEE DWG C-302 FOR CONNECTION OF NEW FENCE TO EXISTING
16. EXISTING TANK SITE ACCESS GATE TO BE REMOVED
17. EXISTING FLUSHING HYDRANT TO BE PROTECTED IN PLACE.
18. CAP EXISTING 6" W. SEE DWG C-105
19. EXISTING GATE TO REMAIN. PROTECT IN PLACE DURING CONSTRUCTION
20. EXISTING ROADWAY TO BE DEMOLISHED AND REPLACED PER DRAWING C-201
21. CUT AND CAP EXISTING SEWER PIPE. CONTRACTOR TO CONFIRM SEWER CONNECTION SOURCE PRIOR TO DEMOLITION AND NOTIFY OWNER IMMEDIATELY IF CONNECTED TO AN ACTIVE SOURCE
22. REMOVE EXISTING STORM DRAIN, CULVERT AND ACCESS DRIVE

Brown AND Caldwell
2 N CENTRAL AVE
SUITE 1600
PHOENIX, AZ 85004

FOR CONSTRUCTION

Registered Professional Engineer (Civil) CERTIFICATE 43859 THERESA C. MULLER Date Signed 08/11/23 ARIZONA, U.S.A.

CITY OF PRESCOTT ARIZONA

ZONE 41 PUMP STATION, TANK AND PIPELINE

REVISIONS

REV	DATE	DESCRIPTION

LINE IS 2 INCHES AT FULL SIZE

DESIGNED: MWS
DRAWN: SCP
CHECKED: NW
CHECKED:
APPROVED: TM

FILENAME
152624-D-100.DWG
BC PROJECT NUMBER
152624
CLIENT PROJECT NUMBER
17-009

DEMOLITION

PUMP STATION DEMOLITION

DRAWING NUMBER
D-100
SHEET NUMBER
6 OF 84

Path: C:\BCPW\D0474239 FILENAME: 152624-D-100.DWG PLOT DATE: 8/11/2023 10:17 AM CAD USER: ANSON COX
COP1.png

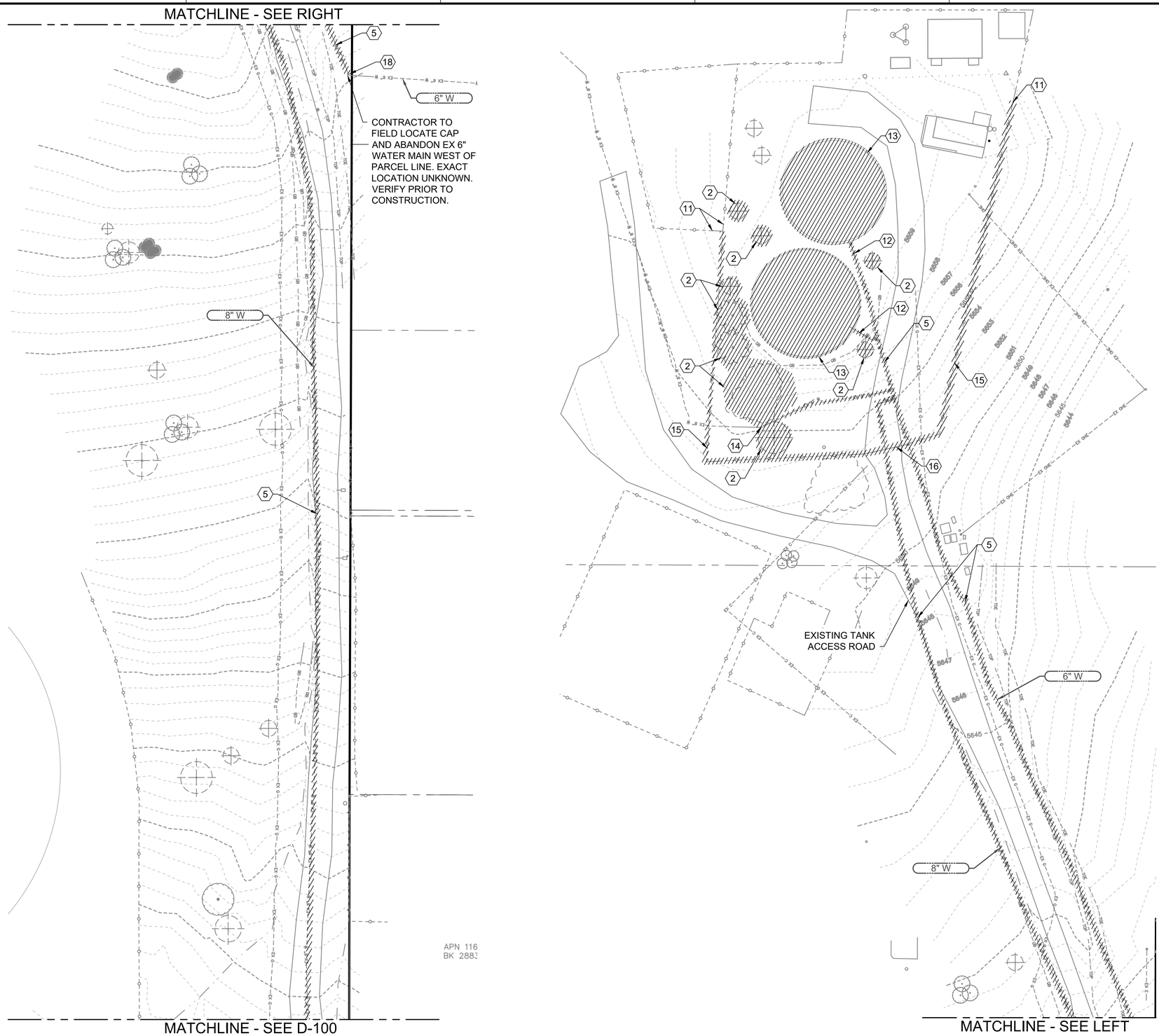

DEMOLITION PLAN

0 10' 20' 40'

N

GENERAL NOTES

1. DEMOLITION WORK SHALL BE SEQUENCED AND COMPLETED ACCORDING TO CONTRACT SPECIFICATIONS. EXISTING PUMP STATION WILL BE DEMOLISHED AFTER THE NEW PUMP STATION PUMP ROOM AND ELECTRICAL ROOM ARE COMPLETE AND OPERATIONAL.
2. REFERENCE SPECIFICATION 02 41 13 FOR ITEMS TO BE SALVAGED. CONTRACTOR SHALL ALSO VERIFY WITH OWNER EQUIPMENT TO BE SALVAGED.
3. CONTRACTOR TO VERIFY EXISTING UTILITY LOCATIONS PRIOR TO DEMOLITION.
4. ARIZONA PUBLIC SERVICE POWER UTILITY ADDRESS: 812 DOUGLAS AVENUE.

KEY NOTES

1. EXISTING PUMP STATION AND GENERATOR TO BE DEMOLISHED, SEE GENERAL NOTE 1
2. VEGETATION/TREES TO BE REMOVED
3. COORDINATE ELECTRICAL UTILITY DEMOLITION WITH UTILITY COMPANY
4. EXISTING FENCING TO BE REMOVED. SEE CIVIL DRAWINGS FOR LOCATION OF NEW FENCE AND CONNECTION OF NEW FENCE TO EXISTING
5. EXISTING WATERLINE TO BE REMOVED
6. CUT/REMOVE WATERLINE TO EXISTING PUMP STATION
7. EXISTING WATERLINE TO BE REMOVED UP TO POINT OF NEW 12" W TIE-IN
8. RESTRAINED CAP ON TEE
9. REMOVE EXISTING 18" CMP, CATCH BASIN AND GRATE
10. REMOVE WATERLINE UP TO METER BOXES WHERE NEW WATERINE CONNECTS PER C-100
11. EXISTING FENCE TO REMAIN. PROTECT IN PLACE
12. DEMOLISH EXISTING TANK PIPING AND APPURTENANCES
13. EXISTING 200,000 GALLON STEEL TANK AND FOUNDATION TO BE REMOVED
14. CONNECT TO NEW WATERLINE. SEE DWG C-107
15. EXISTING FENCING TO BE REMOVED SEE DWG C-302 FOR CONNECTION OF NEW FENCE TO EXISTING
16. EXISTING TANK SITE ACCESS GATE TO BE REMOVED
17. EXISTING FLUSHING HYDRANT TO BE PROTECTED IN PLACE.
18. CAP EXISTING 6" W. SEE DWG C-105
19. EXISTING GATE TO REMAIN. PROTECT IN PLACE DURING CONSTRUCTION
20. EXISTING ROADWAY TO BE DEMOLISHED AND REPLACED PER DRAWING C-201
21. CUT AND CAP EXISTING SEWER PIPE. CONTRACTOR TO CONFIRM SEWER CONNECTION SOURCE PRIOR TO DEMOLITION AND NOTIFY OWNER IMMEDIATELY IF CONNECTED TO AN ACTIVE SOURCE
22. REMOVE EXISTING STORM DRAIN, CULVERT AND ACCESS DRIVE

Brown AND Caldwell
2 N CENTRAL AVE
SUITE 1600
PHOENIX, AZ 85004

FOR CONSTRUCTION

Registered Professional Engineer (Civil) CERTIFICATE 43859 THERESA C. MULLER Date Signed 08/17/22 ARIZONA, U.S.A.

CITY OF PRESCOTT ARIZONA

ZONE 41 PUMP STATION, TANK AND PIPELINE

REVISIONS

REV	DATE	DESCRIPTION

LINE IS 2 INCHES AT FULL SIZE

DESIGNED:	MWS
DRAWN:	SCP
CHECKED:	NW
CHECKED:	
APPROVED:	TM

FILENAME
152624-D-101.DWG

BC PROJECT NUMBER
152624

CLIENT PROJECT NUMBER
17-009

DEMOLITION

TANK DEMOLITION

DRAWING NUMBER
D-101

SHEET NUMBER
7 OF 84

Path: C:\BCPW\D0474239 FILENAME: 152624-D-101.DWG PLOT DATE: 7/28/2022 2:49 PM CAD USER: ANSON COX
COP1.png

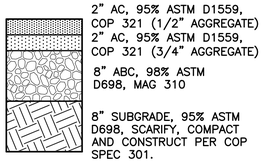

TYPICAL PAVEMENT STRUCTURAL SECTION (1)

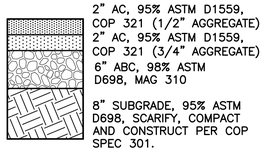

TANK SITE ACCESS ROAD STRUCTURAL SECTION (10)

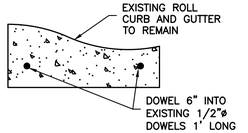

CURB AND GUTTER DOWEL DETAIL

NTS

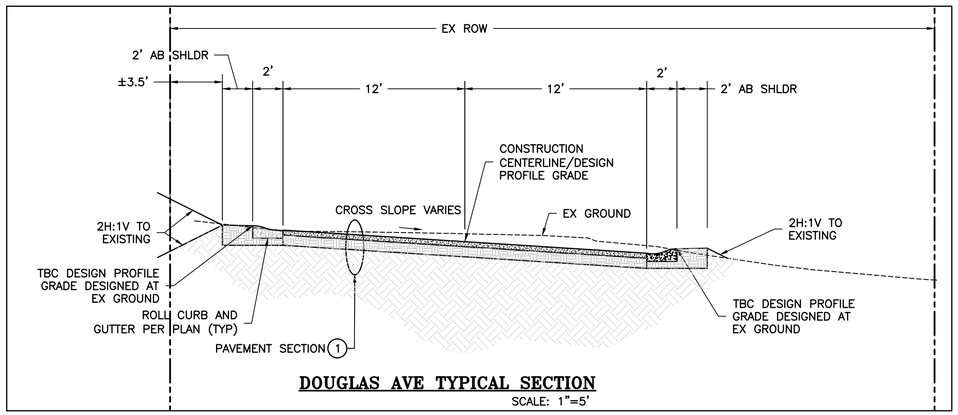

DOUGLAS AVE TYPICAL SECTION

SCALE: 1"=5'

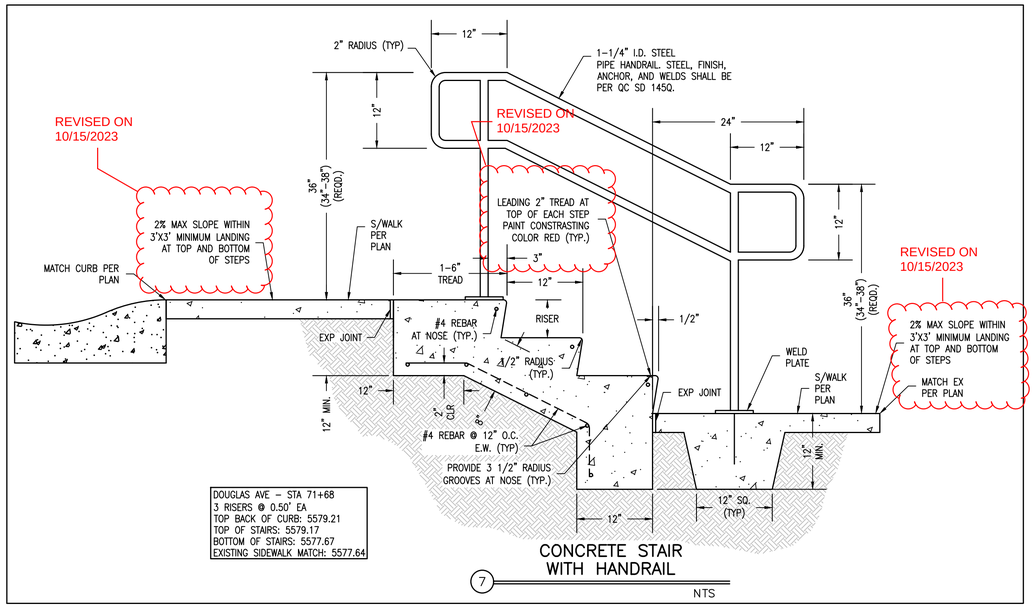

CONCRETE STAIR WITH HANDRAIL (7)

NTS

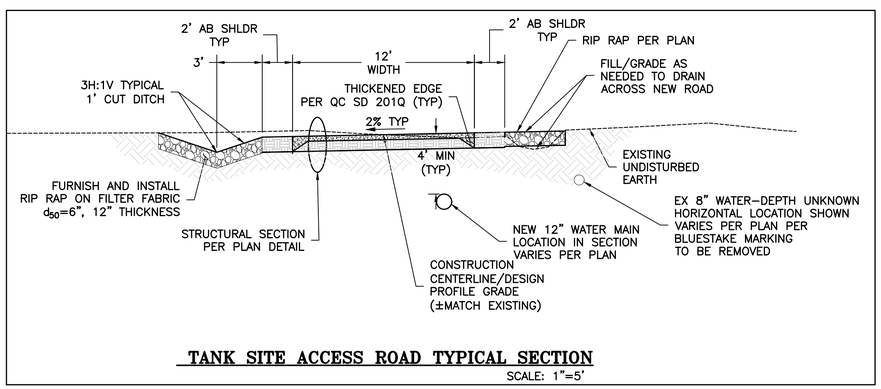

TANK SITE ACCESS ROAD TYPICAL SECTION

SCALE: 1"=5'

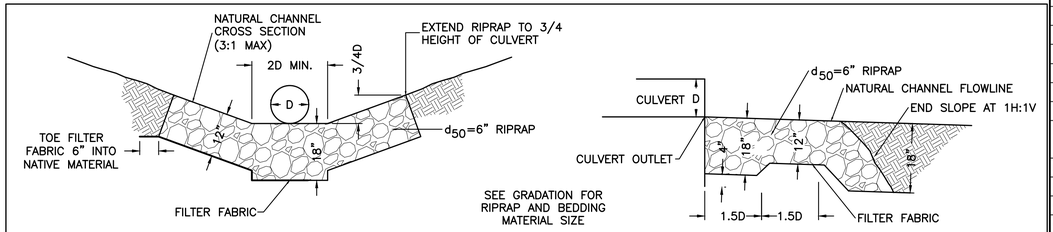

CULVERT OUTLET CROSS SECTION

CULVERT OUTLET PROFILE

CLASSIFICATION AND GRADATION OF ORDINARY RIPRAP

% SMALLER THAN GIVEN SIZE BY WEIGHT	d_{50}=6" INTERMEDIATE ROCK DIMENSION (INCHES)	d_{50}=9" INTERMEDIATE ROCK DIMENSION (INCHES)	d_{50}=12" INTERMEDIATE ROCK DIMENSION (INCHES)	d_{50}=18" INTERMEDIATE ROCK DIMENSION (INCHES)
70-100	12	15	21	30
50-70	9	12	18	24
35-50	6	9	12	18
2-10	2	3	4	6

CULVERT OUTLET EROSION PROTECTION (9)

N.T.S.

APPROVED TRAFFIC CONTROL PLAN AND R.O.W. PERMIT MUST BE OBTAINED FROM PUBLIC WORKS PRIOR TO BEGINNING WORK IN THE R.O.W.

CITY OF PRESCOTT PUBLIC WORKS IS RESPONSIBLE FOR INSPECTION OF IMPROVEMENTS IN THE R.O.W. AND DESIGNATED PUBLIC UTILITY EASEMENTS ONLY. ALL OTHER IMPROVEMENTS (ON-SITE) SHALL BE INDEPENDENTLY INSPECTED.

Brown AND Caldwell

FOR CONSTRUCTION

Registered Professional Engineer (Civil) 22880 GARY R. KELLEY Date signed 8/9/23 ARIZONA, U.S.A.

CITY OF PRESCOTT ARIZONA

ZONE 41 PUMP STATION, TANK AND WATER MAIN

REVISIONS

REV	DATE	DESCRIPTION

LINE IS 2 INCHES AT FULL SIZE

DESIGNED: BWT
DRAWN: BWT
CHECKED: GRK
CHECKED:
APPROVED:

KWE PROJECT NUMBER 18-081
BC PROJECT NUMBER 152624
CLIENT PROJECT NUMBER CIP #17-009

SECTIONS AND DETAILS

DRAWING NUMBER C-001

SHEET NUMBER 8 OF 84

Path: X:\KWEIPROJECTS\2018\18081 ZONE 41 FILENAME: 18081 NOTE SHEETS.DWG PLOT DATE: 8/9/2023 5:16 PM CAD USER: USER

1. ALL CONSTRUCTION SHALL CONFORM TO MARICOPA ASSOCIATION OF GOVERNMENTS (MAG), & CITY OF PRESCOTT (COP) CONSTRUCTION STANDARDS & SPECIFICATIONS, LATEST REVISIONS, UNLESS SPECIFICALLY APPROVED BY THE CITY AND MODIFIED ON THE PLANS, IN CONJUNCTION WITH THE LATEST REVISIONS OF THE MARICOPA ASSOCIATION OF GOVERNMENTS STANDARD SPECIFICATIONS AND DETAILS (MAG STANDARDS). UNLESS SPECIFICALLY MODIFIED ON THE PLANS.
2. IT SHALL BE THE CONTRACTOR'S RESPONSIBILITY TO OBTAIN COPIES OF MAG AND CITY OF PRESCOTT STANDARDS AND SPECIFICATIONS AS WELL AS ALL OTHER STANDARDS AND SPECIFICATIONS NECESSARY TO COMPLETELY AND ACCURATELY INTERPRET THESE PLANS.
3. ALL PLANS SIGNED BY THE CITY ENGINEER ARE NULL AND VOID ONE YEAR FROM DATE OF SIGNATURE IF CONSTRUCTION HAS NOT STARTED. RESUBMITTAL AND REVIEW SHALL BE REQUIRED, AFTER ONE YEAR.
4. ALL QUANTITIES SHOWN ON THE PLANS ARE APPROXIMATE, ARE NOT VERIFIED BY THE PUBLIC WORKS DIRECTOR, AND ARE FURNISHED SOLELY FOR THE CONTRACTOR'S CONVENIENCE. THEY DO NOT NECESSARILY CORRESPOND TO BID SCHEDULE ITEMS. PAYMENT SHALL BE BASED ON BID SCHEDULE ITEMS FOR ACTUAL QUANTITIES PROVIDED AND INSTALLED. THE CONTRACTOR SHALL NOT BE RELIEVED OF HIS RESPONSIBILITY FOR INDEPENDENTLY ESTIMATING WORK QUANTITIES PRIOR TO BIDDING.
5. CITY OF PRESCOTT PUBLIC WORKS DEPARTMENT PERMIT(S) WILL BE REQUIRED FOR ALL OFF-SITE CONSTRUCTION AND CONSTRUCTION WITHIN THE PUBLIC RIGHT OF WAY.
6. IT IS THE SOLE RESPONSIBILITY OF THE CONTRACTOR TO OBTAIN, AT HIS OWN EXPENSE, SUCH PERMITS AS ARE REQUIRED FROM THE APPROPRIATE AGENCIES.
7. THE PUBLIC WORKS DEPARTMENT SHALL BE NOTIFIED A MINIMUM OF 24 HOURS PRIOR TO BEGINNING ANY CONSTRUCTION IN THE PUBLIC RIGHT OF WAY.
8. ANY WORK PERFORMED WITHOUT THE KNOWLEDGE AND APPROVAL OF THE PUBLIC WORKS DIRECTOR AND/OR ALL WORK MATERIALS NOT IN CONFORMATION WITH THE PLANS AND SPECIFICATIONS IS SUBJECT TO REMOVAL AND REPLACEMENT AT THE CONTRACTOR'S EXPENSE.
9. A THOROUGH ATTEMPT HAS BEEN MADE TO SHOW THE LOCATION OF ALL UNDERGROUND OBSTRUCTIONS AND UTILITY LINES IN THE WORK AREA. THE ENGINEER AND THE CITY OF PRESCOTT WILL NOT GUARANTEE ANY LOCATIONS OR ELEVATIONS OF EXISTING UNDERGROUND UTILITIES SHOWN ON THESE PLANS. THE CONTRACTOR SHALL BE RESPONSIBLE AND SHALL NOT BE RELIEVED OF RESPONSIBILITY FOR MAKING A COMPLETE AND ACCURATE ON-SITE DETERMINATION OF THE LOCATIONS, MATERIALS, AND SIZE OF ALL UTILITIES, STRUCTURES, AND FIELD CONDITIONS WHICH MAY AFFECT THE PROGRESS OF THE WORK. THE CONTRACTOR SHALL BE RESPONSIBLE FOR ANY DAMAGE TO STRUCTURES AND UTILITIES ENCOUNTERED DURING CONSTRUCTION AND SHALL FIELD EXPOSE EXISTING UNDERGROUND UTILITIES PRIOR TO TRENCHING IN THEIR VICINITY.
10. THE CONTRACTOR IS REQUIRED TO CONTACT BLUE STAKE (1-800-STAKEIT) A MINIMUM OF TWO WORKING DAYS (48) HOURS PRIOR TO COMMENCEMENT OF CONSTRUCTION. THE APPROPRIATE UTILITY COMPANIES SHALL BE NOTIFIED BY THE CONTRACTOR PRIOR TO ANY CONSTRUCTION.
11. THE CONTRACTOR SHALL BE RESPONSIBLE FOR COORDINATING THE RELOCATION AND/OR SUPPORT OF ALL UTILITIES, POWER POLES, ETC., THAT MAY BE NECESSARY.
12. THE CONTRACTOR SHALL BE RESPONSIBLE FOR SUBMITTING TO THE PUBLIC WORKS DEPARTMENT FOR APPROVAL, TRAFFIC CONTROL PLANS PRIOR TO BEGINNING CONSTRUCTION. THE CONTRACTOR SHALL DETERMINE AND SUBMIT FOR APPROVAL THE EXACT SIGNING/TRAFFIC CONTROL DEVICES NECESSARY AND ALL TRAFFIC CONTROL WORK SHALL BE IN ACCORDANCE WITH THE LATEST REVISIONS THEREOF. NO STREET IS TO BE CLOSED, RESTRICTED, OR CONSTRUCTED UPON UNTIL A TRAFFIC CONTROL PLAN IS PREPARED BY THE CONTRACTOR AND SUBMITTED TO THE PUBLIC WORKS DIRECTOR ONE WEEK IN ADVANCE FOR REVIEW AND APPROVAL.
13. APPROPRIATE EMERGENCY AGENCIES SHALL BE NOTIFIED A MINIMUM OF 24 HOURS PRIOR TO ANY CLOSING OF STREETS.
14. THE CONTRACTOR SHALL BE RESPONSIBLE FOR CONSTRUCTION SURVEYING AND LAYOUT WITH CONTROL PROVIDED BY THE DESIGN ENGINEER OR HIS DESIGNEE.
15. THE CONTRACTOR IS RESPONSIBLE FOR QUALITY CONTROL MEASURES SUFFICIENT TO PRODUCE MATERIALS AND WORKMANSHIP OF ACCEPTABLE QUALITY. PRIOR TO CONSTRUCTION THE CONTRACTOR SHALL SUBMIT A QUALITY CONTROL PLAN. THE CONTRACTOR AT HIS OWN EXPENSE SHALL PROVIDE AN INDEPENDENT GEOTECHNICAL FIRM TO PERFORM QUALITY CONTROL TESTING SUCH AS SOILS AND CONCRETE LAYDOWN COMPACTION TESTING AND FULL TIME ASPHALTIC CONCRETE LAYDOWN COMPACTION TESTING AND ADEQUATE PLANT CONTROL FOR EACH PAVING DAY. THE CITY, BY SEPARATE CONTRACT, WILL BE RESPONSIBLE FOR QUALITY ASSURANCE TESTING AS IT MAY DEEM NECESSARY.
16. THE CONTRACTOR WILL BE RESPONSIBLE FOR ALL COSTS OF TESTING AND INSPECTION, INCLUDING THE PRESENCE OF CITY INSPECTORS, REQUIRED AT NIGHT OR ON WEEKENDS.
17. THE CONTRACTOR SHALL BE RESPONSIBLE FOR ALL RE-WORK AND/OR REMOVAL AND REPLACMENT OF ALL MATERIALS REPRESENTED BY FAILING TESTS OR SUBSTANDARD WORKMANSHIP.
18. THE CONTRACTOR SHALL IMPLEMENT BEST-HOUSE-KEEPING MEASURES, AND EROSION AND SEDIMENT CONTROL MEASURES, TO PREVENT THE TRANSPORT OF CONSTRUCTION MATERIALS INTO DRAINAGE INLETS, STORM DRAIN MANHOLES, UTILITY STRUCTURES, OR ONTO ADJACENT STREETS AND PROPERTIES.
19. APPROVAL OF A PORTION OF THE WORK IN PROGRESS DOES NOT GUARANTEE ITS FINAL ACCEPTANCE. TESTING AND EVALUATION MAY CONTINUE UNTIL THE WRITTEN FINAL ACCEPTANCE OF A COMPLETE AND WORKABLE UNIT.
20. THE CITY OF PRESCOTT MAY SUSPEND THE WORK BY WRITTEN NOTICE WHEN, IN ITS JUDGEMENT, PROGRESS IS UNSATISFACTORY, WORK BEING DONE IS UNAUTHORIZED OR DEFECTIVE, WEATHER CONDITIONS ARE UNSTABLE, OR THERE IS A DANGER TO THE PUBLIC HEALTH AND SAFETY.
21. ALL OBSTRUCTIONS IN THE RIGHT OF WAY SHALL BE REMOVED BEFORE ANY CONSTRUCTION IS PERMITTED.
22. REMOVAL OF STRUCTURES AND OBSTRUCTIONS AS NECESSARY TO COMPLETE THE WORK, OTHER THAN SPECIFICALLY SCHEDULED IN THE BID, IS INCIDENTAL TO THE CONTRACT. NO SEPARATE MEASUREMENT OF OR PAYMENT FOR UNSCHEDULED REMOVAL ITEMS WILL BE MADE.
23. CLEARING AND GRUBBING IS CONSIDERED INCIDENTAL TO THE WORK UNLESS SPECIFICALLY IDENTIFIED IN THE BID SCHEDULE. NO SEPARATE MEASUREMENT OF OR PAYMENT FOR CLEARING AND GRUBBING, AND TREE REMOVAL, WILL BE MADE. THE SITE OF ALL EXCAVATION, EMBANKMENTS, AND FILLS SHALL FIRST BE CLEARED OF STUMPS, TRASH, WEEDS, RUBBISH, TOPSOIL, AND LOOSE BOULDERS WHICH SHALL BE REMOVED AND DISPOSED OF PRIOR TO BIDDING THE CONTRACTOR MUST SATISFY HIMSELF REGARDING THE CHARACTER OF THE SUBSOILS TO INCLUDE THE AMOUNT OF LOAM, CLAY, SAND, QUICKSAND, HARDPAN, GRAVEL, ROCK, WATER, AND ALL OTHER MATERIAL TO BE ENCOUNTERED AND WORK TO BE PERFORMED.
24. THE CONTRACTOR SHALL GUARD AGAINST DAMAGE DURING CONSTRUCTION TO EXISTING IMPROVEMENTS AND IMPROVEMENTS. ANY ITEMS DAMAGED BY THE CONTRACTOR'S ACTIVITIES SHALL BE REPLACED IN KIND OR BETTER AT THE CONTRACTOR'S EXPENSE.
25. THE CONTRACTOR SHALL KEEP SUITABLE EQUIPMENT ON HAND AT THE JOBSITE FOR MAINTENANCE DUST CONTROL, AND SHALL CONTROL DUST AS DIRECTED BY THE APPROPRIATE AGENCY.
26. STREET AND TRAFFIC SIGNS SHALL BE RELOCATED BY THE CONTRACTOR IF NECESSARY, AT THE DIRECTION OF THE PUBLIC WORKS DIRECTOR.
27. BACKFILL COMPACTION SHALL BE TYPE 1 (MAG, SECTION 601) UNLESS OTHERWISE NOTED.
28. AGGREGATE BASE COURSE SHALL NOT BE PLACED ON SUBGRADE UNTIL SUBGRADE REQUIREMENTS HAVE BEEN ACHIEVED.
29. NO PAVING CONSTRUCTION SHALL BE STARTED UNTIL ALL UNDERGROUND UTILITIES WITHIN THE ROADWAY RIGHT-OF-WAY ARE VERIFIED FOR FINAL CONFORMANCE, COMPLETED IN AND TESTED (TO INCLUDE BUT NOT LIMITED TO) SEWER TESTING, LOW AIR TESTING OF MAIN LINE AND SERVICES, TRACE WIRE TESTING, DEFLECTION TESTING AND COMPACTION OF MANHOLES CONFORMING TO COP DETAIL 420P. WATER TESTING CHLORINATION/DISINFECTING OF MAIN LINE AND SERVICES, PRESSURE TESTING, TRACE WIRE TESTING AND VERIFICATION OF VALVE BOXES CONFORMING TO COP DETAIL 391P.
30. ALL ASPHALT CONCRETE PAVEMENT SHALL BE PER APPLICABLE MAG SPECIFICATIONS AS AMENDED BY THE CITY OF PRESCOTT. ASPHALT CONCRETE MIX DESIGN SHALL BE SUBMITTED TO THE PUBLIC WORKS DIRECTOR OR HIS DESIGNEE FOR APPROVAL PRIOR TO START OF CONSTRUCTION.
31. ALL UTILITY FRAMES, COVERS, VALVE BOXES, MANHOLES, ETC. SHALL BE ADJUSTED TO FINISH ASPHALT GRADE AFTER PLACEMENT OF SURFACE COURSE BY THE CONTRACTOR PER COP STANDARD DETAILS.
32. ACCEPTANCE OF THE COMPLETED PAVING STRUCTURES WILL NOT BE GIVEN UNTIL REPRODUCIBLE AS-BUILT PLANS HAVE BEEN SUBMITTED BY THE CONTRACTOR AND APPROVED BY THE CITY.
33. ALL CONCRETE TO BE AT LEAST 3000 PSI CLASS "A" PORTLAND CEMENT CONCRETE, UNLESS OTHERWISE SPECIFIED ON THE PLANS, SPECIFICATIONS, OR IN STANDARD DETAILS.
34. EDGES OF CONCRETE STRUCTURES TO HAVE A ¾" CHAMFER, UNLESS OTHERWISE SPECIFIED ON THE PLANS.
35. CONCRETE SURFACES TO HAVE A BROOM FINISH UNLESS OTHERWISE NOTED ON THE PLANS.
36. ALL EXPANSION JOINTS TO BE SEALED WITH ¾" EXPANSION JOINT, PRE-FORMED JOINT FILLER AND SEALER, IN ACCORDANCE WITH MAG SECTION 729.
37. DRIVEWAY ENTRANCES WILL BE LOCATED AS SPECIFIED ON THE PLANS UNLESS MODIFIED IN THE FIELD BY THE ENGINEER. ALL DRIVEWAY ENTRANCES SHALL BE CONSTRUCTED OVER 6" THICK AGGREGATE BASE COURSE PER MAG SPECIFICATION 702 AND COMPACTED TO 95% OF STANDARD PROCTOR DENSITY, UNLESS OTHERWISE NOTED.
38. ALL DISTURBED FENCES SHALL BE REPLACED IN KIND. CONTRACTOR SHALL EXTEND FENCE REPLACEMENT TO THE CLOSEST UPRIGHT SUPPORT NECESSARY FOR STABILITY.
39. MAILBOXES SHALL BE REMOVED AND REINSTALLED AS DIRECTED BY THE U.S. POSTAL SERVICE AND THE CITY OF PRESCOTT TEMPORARY LOCATIONS SHALL BE PER U.S.P.S.
40. NO JOB WILL BE CONSIDERED COMPLETE UNTIL ALL CURBS, PAVEMENT, AND SIDEWALKS HAVE BEEN SWEPT CLEAN OF ALL DIRT AND DEBRIS.
41. THE CONTRACTOR SHALL WARRANT ALL WORK FOR A MINIMUM TWO YEAR PERIOD AFTER FORMAL ACCEPTANCE OF THE WORK BY THE CITY.

COP STANDARD DETAIL	GENERAL NOTES	Charles Andrews CITY ENGINEER	REVISED: 07/16	DETAIL No. 101P

1. ALL WORK SHALL CONFORM TO MARICOPA ASSOCIATION OF GOVERNMENTS (MAG), & CITY OF PRESCOTT (COP) CONSTRUCTION STANDARDS & SPECIFICATIONS, WHICH ARE ON FILE IN THE OFFICE OF THE CITY ENGINEER.
2. ALL EXISTING FRAMES, COVERS, VALVE BOXES, & MANHOLES SHALL BE EITHER REPLACED OR ADJUSTED TO FINISH GRADE DEPENDING ON PLAN CALL OUT UPON COMPLETION OF PAVING, UTILITY, OR RELATED CONSTRUCTION.
3. ANY QUANTITIES SHOWN ON PLANS ARE NOT VERIFIED BY THE PUBLIC WORKS UTILITIES DIRECTOR.
4. ACCEPTANCE OF THE COMPLETED WORK WILL NOT BE GIVEN UNTIL 3 MIL MYLAR & CAD FORMAT DIGITAL "AS-BUILT" PLANS ON CITY OF PRESCOTT SURVEY DATUM & COORDINATES HAVE BEEN SUBMITTED & SEALED BY A REGISTERED PROFESSIONAL ENGINEER AND APPROVED BY THE PUBLIC WORKS DEPARTMENT.
5. CITY OF PRESCOTT PUBLIC WORKS UTILITIES SHALL BE NOTIFIED A MINIMUM OF 24 HOURS PRIOR TO THE START OF ANY WORK.
6. ALL WORK & MATERIALS WHICH DO NOT CONFORM TO THE SPECIFICATIONS ARE SUBJECT TO REMOVAL & REPLACEMENT AT THE CONTRACTOR'S EXPENSE.
7. ANY WORK PERFORMED WITHOUT THE KNOWLEDGE OF THE CITY INSPECTOR OR HIS REPRESENTATIVE IS SUBJECT TO REMOVAL & REPLACEMENT AT THE CONTRACTOR'S EXPENSE.
8. THE CONTRACTOR SHALL PROVIDE SUFFICIENT MEN, EQUIPMENT, & MATERIAL ON THE JOB AT ALL TIMES DURING CONSTRUCTION TO COMPLY WITH SPECIFICATIONS & TO COMPLETE THE WORK.
9. CIP INSPECTION TO BE DONE BY THE CITY OF PRESCOTT PUBLIC WORKS DEPARTMENT OR THEIR REPRESENTATIVE. PRIVATE DEVELOPMENTS SHALL PROVIDE FOR INDEPENDENT 3RD PARTY INSPECTIONS.
10. CONTRACTOR TO NOTIFY PROJECT ENGINEER 72 HOURS (3 WORKING DAYS) IN ADVANCE OF CONSTRUCTION TO SCHEDULE CONSTRUCTION CONTROL STAKING.
11. THE CONTRACTOR IS TO UNCOVER ALL EXISTING LINES BEING TIED INTO AND VERIFY GRADES, MATERIAL SIZE & ELEVATIONS BEFORE COMMENCING CONSTRUCTION & ORDERING MATERIALS.
12. IT IS THE CONTRACTOR'S RESPONSIBILITY TO LOCATE ALL UNDERGROUND PIPELINES, TELEPHONE & ELECTRICAL CONDUITS & STRUCTURES IN ADVANCE OF ANY CONSTRUCTION & OBSERVE ALL POSSIBLE PRECAUTIONS TO AVOID ANY DAMAGE TO SUCH. THE ENGINEER &/OR OWNER WILL NOT GUARANTEE ANY LOCATIONS AS SHOWN ON THESE PLANS, OR THOSE OMITTED FROM SAME.
13. CONTRACTOR SHALL NOTIFY "BLUE STAKE" AT 1-800-STAKEIT (1-800-782-5348) AT LEAST 48 HOURS PRIOR TO CONSTRUCTION.
14. CONTRACTOR SHALL VERIFY ALL QUANTITIES SHOWN & MAKE HIS BID BASED UPON THOSE VERIFICATIONS. IF ANY DISCREPANCY IN QUANTITIES IS FOUND, THE CONTRACTOR SHALL NOTIFY THE ENGINEER AS SUCH.
15. ARIZONA DEPARTMENT OF ENVIRONMENTAL QUALITY REQUIREMENTS MUST BE COMPLIED WITH.
16. ARIZONA DEPARTMENT OF ENVIRONMENTAL QUALITY REQUIREMENTS SHALL APPLY WHEN MORE STRINGENT THAN THE MAG OR CITY OF PRESCOTT STANDARD SPECIFICATIONS FOR PUBLIC WORKS CONSTRUCTION; MORE SPECIFICALLY WHERE THEY PERTAIN TO MAXIMUM ALLOWABLE SEWER LINE/PRESSURE SEWER LINE EXFILTRATION-INFILTRATION RATES.
17. ALL PLANS SIGNED BY THE CITY ARE NULL & VOID ONE YEAR FROM DATE OF SIGNATURE IF CONSTRUCTION HAS NOT STARTED AND/OR IS NOT ACTIVELY PROGRESSING.
18. PROJECT CONTRACTOR SHALL BE RESPONSIBLE FOR SUBMITTING TRAFFIC CONTROL PLANS WHICH SHALL BE MADE A PART OF THE PLAN REVIEW REQUEST TO THE CITY ENGINEER FOR APPROVAL.
19. WATER-SEWER SEPARATION SHALL BE PURSUANT TO AAC R-18-5-502C.
20. ALL TRENCHES & BEDDING SHALL BE PER COP DETAIL 200P & TECHNICAL SPECIFICATIONS.
21. ALL REVISIONS TO ORIGINAL PLANS MUST BE APPROVED BY THE PUBLIC WORKS DIRECTOR PRIOR TO CONSTRUCTION. ANY UNAPPROVED REVISIONS ARE SUBJECT TO REMOVAL & REPLACEMENT AT CONTRACTOR'S EXPENSE.
22. SEWER FORCE MAIN LINES SHALL BE DESIGNED AND CONSTRUCTED OF A MATERIAL SUITABLE FOR SANITARY SEWER PRESSURE PIPE AS APPROVED BY THE CITY ENGINEER. SEWER LINES SHALL BE PRESSURE TESTED TO A MINIMUM OF 50 PSI ABOVE DESIGN WORKING PRESSURE AT THE LOWEST POINT IN THE SYSTEM FOR A MINIMUM OF 4 HOURS IN ACCORDANCE WITH AAC R18-9.
23. SEWER LINE LOW PRESSURE AIR TESTS SHALL BE DONE ON 100% OF ALL LINES AFTER PLACEMENT OF BACKFILL TO PAVEMENT SUBGRADE. TEST EACH SEGMENT OF THE SEWER LINE FOR LEAKAGE USING THE APPLICABLE METHOD BELOW AND RECORD THE RESULTS:
    - 23A. "STANDARD TEST METHOD FOR INSTALLATION OF ACCEPTANCE OF PLASTIC GRAVITY SEWER LINES USING LOW-PRESSURE AIR, F1417-92(1998)" PUBLISHED BY THE AMERICAN SOCIETY FOR TESTING AND MATERIALS.
24. SEWER MANHOLES EXFILTRATION TESTS SHALL BE DONE ON 100% OF ALL MANHOLES. VACUUM TESTING IN ACCORDANCE WITH CITY STANDARDS MAY BE USED IN LIEU OF EXFILTRATION TEST. THE CONTRACTOR SHALL TEST EACH MANHOLE USING ONE OF THE FOLLOWING TEST PROTOCOLS:
    - 24A. WATERTIGHTNESS TESTING BY FILLING THE MANHOLE WITH WATER. THE CONTRACTOR SHALL ENSURE THAT THE DROP IN WATER LEVEL FOLLOWING PRESOAKING DOES NOT EXCEED 0.00034 OF THE TOTAL MANHOLE VOLUME PER HOUR.
    - 24B. NEGATIVE AIR PRESSURE TESTING USING THE "STANDARD TEST METHOD FOR CONCRETE SEWER MANHOLES BY NEGATIVE AIR PRESSURE" (VACUUM) TEST, C1244-05e1(2002), PUBLISHED BY THE AMERICAN SOCIETY FOR TESTING AND MATERIALS. THIS MATERIAL IS INCORPORATED BY REFERENCE & DOES NOT INCLUDE ANY LATER AMENDMENTS OR EDITIONS OF THE INCORPORATED MATERIAL, & MAY BE VIEWED AT THE ARIZONA DEPARTMENT OF ENVIRONMENTAL QUALITY, 1110 W. WASHINGTON, PHOENIX, AZ. 85007, OR OBTAINED FROM THE AMERICAN SOCIETY FOR TESTING & MATERIALS INTERNATIONAL, 100 BAR HARBOR DRIVE, WEST CONSHOHOCKEN, PA. 19428-2959.
25. SEWER LINE DEFLECTION TESTS WITH AN APPROPRIATELY SIZED MANDREL SHALL BE DONE ON 100% OF ALL NON-RIGID PIPE LINES.
26. THE CONTRACTOR SHALL PERFORM A VISUAL INSPECTION OF ALL SEWER MAINS AND LATERALS INSTALLED WITHIN THE CITY'S COLLECTION SYSTEM UTILIZING A SEWER CCTV SYSTEM AFTER COMPLETE BACKFILL AND COMPACTION BUT BEFORE INSTALLING ANY PORTION OF THE PAVEMENT STRUCTURAL SECTION. THE INSPECTION SHALL COMPLY WITH THE CITY'S VIDEO ACCEPTANCE PROCEDURE. THE CONTRACTOR SHALL PROVIDE 72 HOURS ADVANCE NOTICE FOR CITY STAFF TO BE PRESENT DURING THE VIDEO OPERATION AND SHALL PROVIDE THE CITY A VIDEO DVD AND HARD COPY OF THE INSPECTION REPORT UPON COMPLETION.
27. COVER EACH SEWER LINE WITH AT LEAST 3 FEET OF EARTH COVER MEETING THE REQUIREMENTS "TRENCH EXCAVATION, BACKFILLING, & COMPACTION" (SECTION 601) REVISED 2004, PUBLISHED BY THE MARICOPA ASSOCIATION OF GOVERNMENTS. & "RIGID PIPE BEDDING FOR SANITARY SEWERS" (WWM 104) REVISED JULY 2002, PUBLISHED BY PIMA COUNTY WASTEWATER MANAGEMENT.
28. PRESSURE SEWER MAINS AND SERVICE LATERALS (LPS) SHALL BE SUBJECT TO A PRESSURE & LEAKAGE TEST IN ACCORDANCE WITH AWWA-C-600 STANDARD. TEST PRESSURE SHALL BE A MINIMUM OF 100 PSI, OR 50 PSI OVER WORKING PRESSURE, WHICHEVER IS GREATER. TESTING SHALL BE DONE AFTER BACKFILL TO SUBGRADE.

COP STANDARD DETAIL	WASTEWATER PLAN GENERAL NOTES	Charles Andrews CITY ENGINEER	REVISED: 07/16	DETAIL No. 104P

1. ALL WORK SHALL CONFORM TO MARICOPA ASSOCIATION OF GOVERNMENTS (MAG), & CITY OF PRESCOTT (COP) CONSTRUCTION STANDARDS & SPECIFICATIONS, WHICH ARE ON FILE IN THE OFFICE OF THE CITY ENGINEER.
2. ALL EXISTING FRAMES, COVERS, VALVE BOXES, & MANHOLES SHALL BE EITHER REPLACED OR ADJUSTED TO FINISH GRADE DEPENDING ON PLAN CALL OUT UPON COMPLETION OF PAVING, UTILITY, OR RELATED CONSTRUCTION.
3. ANY QUANTITIES SHOWN ON PLANS ARE NOT VERIFIED BY THE PUBLIC WORKS UTILITIES DIRECTOR.
4. ACCEPTANCE OF THE COMPLETED WORK WILL NOT BE GIVEN UNTIL 3 MIL MYLAR & CAD FORMAT DIGITAL "AS-BUILT" PLANS ON CITY OF PRESCOTT SURVEY DATUM & COORDINATES HAVE BEEN SUBMITTED & SEALED BY A REGISTERED PROFESSIONAL ENGINEER AND APPROVED BY THE PUBLIC WORKS DEPARTMENT.
5. CITY OF PRESCOTT PUBLIC WORKS UTILITIES SHALL BE NOTIFIED A MINIMUM OF 24 HOURS PRIOR TO THE START OF ANY WORK.
6. ALL WORK & MATERIALS WHICH DO NOT CONFORM TO THE SPECIFICATIONS ARE SUBJECT TO REMOVAL & REPLACEMENT AT THE CONTRACTOR'S EXPENSE.
7. ANY WORK PERFORMED WITHOUT THE KNOWLEDGE OF THE CITY INSPECTOR OR HIS REPRESENTATIVE IS SUBJECT TO REMOVAL & REPLACEMENT AT THE CONTRACTOR'S EXPENSE.
8. THE CONTRACTOR SHALL PROVIDE SUFFICIENT MEN, EQUIPMENT, & MATERIAL ON THE JOB AT ALL TIMES DURING CONSTRUCTION TO COMPLY WITH SPECIFICATIONS & TO COMPLETE THE WORK.
9. CIP INSPECTION TO BE DONE BY THE CITY OF PRESCOTT PUBLIC WORKS DEPARTMENT OR THEIR REPRESENTATIVE. PRIVATE DEVELOPMENTS SHALL PROVIDE FOR INDEPENDENT 3RD PARTY INSPECTIONS.
10. CONTRACTOR TO NOTIFY PROJECT ENGINEER 72 HOURS (3 WORKING DAYS) IN ADVANCE OF CONSTRUCTION TO SCHEDULE CONSTRUCTION CONTROL STAKING.
11. THE CONTRACTOR IS TO UNCOVER ALL EXISTING LINES BEING TIED INTO AND VERIFY GRADES, MATERIAL SIZE & ELEVATIONS BEFORE COMMENCING CONSTRUCTION & ORDERING MATERIALS.
12. IT IS THE CONTRACTOR'S RESPONSIBILITY TO LOCATE ALL UNDERGROUND PIPELINES, TELEPHONE & ELECTRICAL CONDUITS & STRUCTURES IN ADVANCE OF ANY CONSTRUCTION & OBSERVE ALL POSSIBLE PRECAUTIONS TO AVOID ANY DAMAGE TO SUCH. THE ENGINEER &/OR OWNER WILL NOT GUARANTEE ANY LOCATIONS AS SHOWN ON THESE PLANS, OR THOSE OMITTED FROM SAME.
13. CONTRACTOR SHALL NOTIFY "BLUE STAKE" AT 1-800-STAKEIT (1-800-782-5348) AT LEAST 48 HOURS PRIOR TO CONSTRUCTION.
14. CONTRACTOR SHALL VERIFY ALL QUANTITIES SHOWN & MAKE HIS BID BASED UPON THOSE VERIFICATIONS. IF ANY DISCREPANCY IN QUANTITIES IS FOUND, THE CONTRACTOR SHALL NOTIFY THE ENGINEER AS SUCH.
15. ARIZONA DEPARTMENT OF ENVIRONMENTAL QUALITY REQUIREMENTS MUST BE COMPLIED WITH.
16. ARIZONA DEPARTMENT OF ENVIRONMENTAL QUALITY REQUIREMENTS SHALL APPLY WHEN MORE STRINGENT THAN THE MAG OR CITY OF PRESCOTT STANDARD SPECIFICATIONS FOR PUBLIC WORKS CONSTRUCTION.
17. ALL PLANS SIGNED BY THE CITY ARE NULL & VOID ONE YEAR FROM DATE OF SIGNATURE IF CONSTRUCTION HAS NOT STARTED AND/OR IS NOT ACTIVELY PROGRESSING.
18. PROJECT CONTRACTOR SHALL BE RESPONSIBLE FOR SUBMITTING TRAFFIC CONTROL PLANS WHICH SHALL BE MADE A PART OF THE PLAN REVIEW REQUEST TO THE CITY ENGINEER FOR APPROVAL.
19. ALL WATER LINES & APPURTENANCES SHALL BE PROVIDED WITH TRACE WIRE PER CITY STANDARD DETAIL. TRACE WIRE SHALL BE SUBJECT TO A TRACEABILITY TEST, EASILY ACCESSIBLE, & ANY DEFICIENCIES SHALL BE CORRECTED PRIOR TO PAVING. THE TRACE WIRE SHOULD BE TESTED AND SUBMITTED AS A PACKAGE WITH THE TESTING PACKET.
20. WATER-SEWER SEPARATION SHALL BE PURSUANT TO AAC R-18-5-502C.
21. WATER MAINS SHALL BE SUBJECT TO A PRESSURE & LEAKAGE TEST IN ACCORDANCE WITH AWWA C-600 STANDARD.
22. WATER MAINS SHALL BE DISINFECTED IN ACCORDANCE WITH ADEQ ENGINEERING BULLETIN NO. 8 "DISINFECTION OF WATER SYSTEMS".
23. OPERATION OF VALVES TO BE DONE BY CITY PERSONNEL ONLY.
24. DUCTILE IRON PIPE TO BE INSTALLED PER MANUFACTURER'S REQUIREMENTS. ALL MATERIALS USED IN THE INSTALLATION OF DUCTILE IRON PIPE SHALL BE PURSUANT TO AAC R-18-4.
25. ALL MATERIALS & PRODUCTS THAT COME INTO CONTACT WITH DRINKING WATER OR DRINKING WATER TREATMENT CHEMICALS MUST COMPLY WITH NSF STANDARD 61. ANY "OR EQUAL" SUBSTITUTION SHALL ALSO MEET NSF STANDARD 61.
26. ALL TRENCHES & BEDDING SHALL BE PER COP DETAIL 200P & TECHNICAL SPECIFICATIONS.
27. ALL MATERIALS USED IN THE INSTALLATION OF WATER MAINS SHALL BE PURSUANT TO AAC R-18-4 & SHALL BE NSF APPROVED FOR POTABLE WATER.
28. ALL REVISIONS TO ORIGINAL PLANS MUST BE APPROVED BY THE PUBLIC WORKS DIRECTOR PRIOR TO CONSTRUCTION.
29. ALL DUCTILE IRON, COPPER, & BRASS FITTINGS SHALL BE ENCASED IN POLYETHYLENE PROTECTIVE WRAPPING IN ACCORDANCE WITH MAG SECTION 610.5 UNLESS COUNTERINDICATED BY GEOTECHNICAL CORROSIVITY TESTING OF BEDDING AND SHADING MATERIALS & APPROVED BY THE PUBLIC WORKS DIRECTOR.
30. WATER LINES SHALL BE INSTALLED WITH MECHANICAL RESTRAINTS WHERE JOINT RESTRAINTS IS REQUIRED.
31. WATER SERVICE INTERRUPTION NOTICES SHALL BE GIVEN TO AFFECTED RESIDENTS BY THE CONTRACTOR AT HIS EXPENSE. ADVANCE NOTIFICATION REQUIREMENTS MUST BE APPROVED BY THE PUBLIC WORKS DIRECTOR PRIOR TO SCHEDULING A SHUTDOWN.
32. WATER MAIN TAPS, SERVICE TAPS, SHUTDOWN REQUESTS, AND METER REQUESTS MUST BE INITIATED WITH THE CITY INSPECTOR A MINIMUM OF 5 WORKING DAYS IN ADVANCE.

COP STANDARD DETAIL	WATER PLAN GENERAL NOTES	Charles Andrews CITY ENGINEER	REVISED: 07/16	DETAIL No. 103P

APPROVED TRAFFIC CONTROL PLAN AND R.O.W. PERMIT MUST BE OBTAINED FROM PUBLIC WORKS PRIOR TO BEGINNING WORK IN THE R.O.W.

CITY OF PRESCOTT PUBLIC WORKS IS RESPONSIBLE FOR INSPECTION OF IMPROVEMENTS IN THE R.O.W. AND DESIGNATED PUBLIC UTILITY EASEMENTS ONLY. ALL OTHER IMPROVEMENTS (ON-SITE) SHALL BE INDEPENDENTLY INSPECTED.

Brown AND Caldwell

FOR CONSTRUCTION

Registered Professional Engineer (Civil) 22880 GARY R. KELLEY Date signed 8/9/23 ARIZONA, U.S.A.

CITY OF PRESCOTT ARIZONA

ZONE 41 PUMP STATION, TANK AND WATER MAIN

REVISIONS

REV	DATE	DESCRIPTION

LINE IS 2 INCHES AT FULL SIZE

DESIGNED: BWT
DRAWN: BWT
CHECKED: GRK
CHECKED:
APPROVED:

KWE PROJECT NUMBER 18-081
BC PROJECT NUMBER 152624
CLIENT PROJECT NUMBER CIP #17-009

GENERAL NOTES 1

DRAWING NUMBER
C-002

SHEET NUMBER 9 OF 84

Path: X:\KWE\PROJECTS\2018\18081 ZONE 41 FILENAME: 18081 NOTE SHEETS.DWG PLOT DATE: 8/9/2023 5:16 PM CAD USER: USER

1. ALL GRADING SHALL CONFORM TO THE CURRENT CITY ADOPTED EDITION OF THE INTERNATIONAL BUILDING CODE, AND CITY OF PRESCOTT LAND DEVELOPMENT CODE (REFERENCE CITY OF PRESCOTT STANDARD SECTIONS).
2. ALL PROVISIONS OF THE PRELIMINARY SOILS REPORT PREPARED BY ___ETC_____, DATED _JULY 18, 2019_ SHALL BE COMPLIED WITH DURING OPERATIONS.
3. THIS PLAN IS FOR GRADING PURPOSES ONLY. APPROVAL OF THIS PLAN DOES NOT CONSTITUTE APPROVAL OF DRIVEWAY LOCATIONS OR SIZES, PARKING LOT LAYOUT, SEWER AND WATER FACILITIES, BUILDING LOCATIONS, OFF-SITE DRAINAGE FACILITIES OR OTHER ITEMS NOT RELATED DIRECTLY TO THE BASIC GRADING OPERATION.
4. CERTIFICATION FROM THE REGISTERED CIVIL ENGINEER AND SOILS/GEOLOGICAL ENGINEER STATING THAT THE ROUGH GRADING HAS BEEN COMPLETED PER THE APPROVED PLAN, AND A COMPACTION REPORT FROM THE SOILS ENGINEER ON ANY FILL AREAS THAT ARE REQUIRED SHALL BE PROVIDED PRIOR TO BUILDING PERMITS BEING ISSUED.
5. PARTIES NAMED ON ADEQ'S NOTICE OF INTENT (N.O.I.) ARE RESPONSIBLE FOR EROSION, DUST, MUD, SILT, DEBRIS, AND TEMPORARY DRAINAGE CONTROL DURING GRADING OPERATIONS AND MAY BE REQUIRED TO PROVIDE A SWPPP.
6. ANY ON-SITE RETAINING WALLS WILL REQUIRE APPROVAL AS PART OF THESE PLANS. ANY NECESSARY RETAINING WALLS ON THE PERIMETER OF THIS SITE MAY BE REQUIRED TO BE IN PLACE AND APPROVED BY THE CITY BUILDING DEPARTMENT PRIOR TO THE START OF GRADING. A SEPARATE PLAN WITH REQUIRED STRUCTURAL CALCULATIONS MAY BE REQUESTED FOR RETAINING WALLS.
7. ANY INFRASTRUCTURE CONSTRUCTED IN THE PUBLIC RIGHT OF WAY WILL REQUIRE SEPARATE PLAN APPROVAL AND INSPECTION FROM THE CITY ENGINEER.
8. ANY WALLS, FENCES, STRUCTURES AND/OR APPURTENANCES ADJACENT TO THIS PROJECT SHALL BE PROTECTED IN PLACE. IF GRADING OPERATIONS DAMAGE OR ADVERSELY AFFECT SAID ITEMS IN ANY WAY, THE CONTRACTOR AND/OR DEVELOPER IS RESPONSIBLE FOR WORKING OUT AN ACCEPTABLE SOLUTION TO THE SATISFACTION OF THE AFFECTED PROPERTY OWNER(S).
9. THE CONTRACTOR/DEVELOPER IS RESPONSIBLE FOR ENSURING THAT RETAINING WALLS DO NOT INTERFERE WITH PROVISION OF UTILITIES. WALLS MUST BE CONSTRUCTED ON SITE AND OUTSIDE OF THE RIGHT OF WAY. THIS SHALL INCLUDE THE FOOTINGS.
10. IT IS THE CONTRACTOR'S RESPONSIBILITY TO ENSURE THAT COMPACTION HAS BEEN ATTAINED ON THE ENTIRE GRADING SITE IN ACCORDANCE WITH THE GENERAL ENGINEERING PLAN, INCLUDING FILL AREAS OUTSIDE THE BUILDING PADS AND ON ALL FILL SLOPES, AND SHALL BE CERTIFIED BY THE SOIL'S ENGINEER.
11. CITY APPROVAL OF PLANS DOES NOT RELIEVE THE DEVELOPER FROM THE RESPONSIBILITY FOR CORRECTION OF ERROR OR OMISSION DISCOVERED DURING CONSTRUCTION. UPON REQUEST, THE REQUIRED PLAN REVISIONS SHALL BE PROMPTLY SUBMITTED TO THE CITY ENGINEER FOR APPROVAL.
12. IT SHALL BE THE CONTRACTOR'S RESPONSIBILITY TO CALL THE CITY ENGINEER'S OFFICE AT (928) 777-1140 FOR ANY REQUIRED CIVIL INSPECTION 24 HOURS PRIOR TO PERFORMING ANY WORK. WORK PERFORMED WITHOUT CALLING FOR INSPECTION MAY BE REJECTED AND, IF REJECTED, SHALL BE REMOVED SOLELY AT THE CONTRACTOR'S EXPENSE.
13. NO GRADING SHALL COMMENCE WITHOUT OBTAINING A GRADING PERMIT AND NOTIFYING THE CITY OF PRESCOTT OR DEVELOPER'S GRADING INSPECTOR TO SCHEDULE A PREGRADING MEETING TWO WORKING DAYS PRIOR TO THE START OF WORK.
14. PRIOR TO THE START OF GRADING ALL SWPPP MEASURES SHALL BE IN PLACE. ALL DEBRIS, INCLUDING EXISTING STRUCTURES, FOOTINGS, FOUNDATIONS AND RUBBLE SHALL BE REMOVED FROM THE SITE TO THE SATISFACTION OF THE SOILS ENGINEER.
15. AFTER REMOVAL OF DEBRIS, ANY EXISTING FILL OR DISTURBED NATURAL SOILS SHALL BE EXCAVATED TO THE SATISFACTION OF THE SOILS ENGINEER.
16. THE EXPOSED SOILS SHALL THEN BE INSPECTED BY THE SOILS ENGINEER, AND ANY ADDITIONAL OVER-EXCAVATION SHALL THEN BE MADE IN ACCORDANCE WITH THE SOILS ENGINEER'S RECOMMENDATIONS AND AS CONTAINED IN THE SOIL'S REPORT.
17. THE EXPOSED SOILS SHALL THEN BE SCARIFIED TO PROVIDE A BOND WITH NEW FILL, BROUGHT TO PROPER MOISTURE CONTENT AND COMPACTED TO AT LEAST 90% OF THE MAXIMUM DENSITY, AS DETERMINED BY ASTM D1557-78 OR EQUIVALENT COMPACTION SHALL BE OBTAINED BY METHODS SPECIFIED BY THE SOILS ENGINEER. ROAD PRISM SUBGRADE SHALL BE COMPACTED TO AT LEAST 95% STANDARD OR MODIFIED PER SOILS ENGINEER'S RECOMMENDATIONS.
18. THE SOILS AND DESIGN ENGINEER OF RECORD SHALL ALSO BE RESPONSIBLE TO INSPECT, VERIFY AND REPORT THAT PROPER COMPACTION HAS BEEN OBTAINED BY EARTHWORK CONTRACTOR OR SUBCONTRACTOR AND PRIVATE UTILITY FRANCHISES CONCERNING UTILITY LINE BACKFILL, TO INCLUDE ELECTRICAL, GAS, CABLE, FIBEROPTIC AND LANDSCAPE IRRIGATION LINES. ADDITIONALLY, WATER AND SEWER LINES TO BE BACKFILLED AND COMPACTED IN ACCORDANCE WITH GENERAL ENGINEERING REQUIREMENTS SECTION AND DETAIL.
19. AN AS-GRADED GRADING PLAN AND THE CERTIFICATION OF COMPLIANCE FORMS FOR SAID GRADING PLAN WITH THE PROPER STAMPS AND SIGNATURES ARE TO BE SUBMITTED TO THE CITY ENGINEER PRIOR TO RELEASE OF GRADING BOND AND PRIOR TO FINAL GRADING INSPECTION. BUILDING PAD CERTIFICATION SHALL BE SUBMITTED TO THE BUILDING DEPARTMENT WHEN REQUESTED.
20. NO FILL SHALL BE PLACED UNTIL STRIPPING OF VEGETATION, REMOVAL OF UNSUITABLE SOILS, AND INSTALLATION OF SUBDRAINS (IF ANY) HAVE BEEN INSPECTED AND APPROVED BY THE SOILS ENGINEER.
21. ENGINEER MUST SET GRADE STAKES FOR ALL DRAINAGE DEVICES AND OBTAIN INSPECTION BEFORE POURING.
22. GRADING SHALL NOT BE STARTED WITHOUT FIRST NOTIFYING CITY PUBLIC WORKS INSPECTION DEPARTMENT. A PRE-GRADING MEETING ON THE SITE IS REQUIRED BEFORE BEGINNING GRADING ACTIVITIES BY THE FOLLOWING PEOPLE PRESENT: OWNER, GRADING CONTRACTOR, DESIGN CIVIL ENGINEER, SOIL ENGINEER/GEOLOGIST, PUBLIC WORKS INSPECTOR, AND WHEN REQUIRED, THE ARCHAEOLOGIST AND PALEONTOLOGIST. THE REQUIRED INSPECTIONS FOR GRADING WILL BE EXPLAINED AT THE PRE-CONSTRUCTION MEETING.
23. ALL EXISTING FILLS SHALL BE APPROVED AND CERTIFIED BY THE SOILS ENGINEER OR REMOVED PRIOR TO PLACING ADDITIONAL FILLS.
24. ALL TRENCH BACKFILLS SHALL BE TESTED AND APPROVED BY THE SOIL ENGINEER.
25. THE COMPACTION REPORT AND APPROVAL FROM THE SOIL ENGINEER SHALL INDICATE THE TYPE OF FIELD TESTING PERFORMED. EACH TEST SHALL BE IDENTIFIED WITH THE METHOD OF OBTAINING THE IN-PLACE DENSITY, WHETHER SAND CONE OR NUCLEAR GAUGE, AND SHALL BE SO NOTED FOR EACH TEST.
26. EXPORT SOIL MUST BE TRANSPORTED TO A LEGAL DUMP OR TO A PERMITTED SITE SHOWN CLEARLY ON APPROVED PLANS.
27. ALL EXISTING DRAINAGE COURSES THROUGH THIS SITE SHALL REMAIN OPEN UNTIL FACILITIES TO HANDLE STORM WATER ARE APPROVED AND FUNCTIONAL; HOWEVER, IN ANY CASE, THE PERMITTEE SHALL BE HELD LIABLE FOR ANY DAMAGE DUE TO OBSTRUCTING NATURAL DRAINAGE PATTERNS.

COP STANDARD DETAIL	GRADING AND DRAINAGE NOTES	Charles Andrews CITY ENGINEER	REVISED: 07/16	DETAIL No. 105P-1

1. A COPY OF THE APPROVED GRADING AND DRAINAGE PLAN FOR THIS PROJECT AND EROSION AND SEDIMENT CONTROL (ESC) PLAN OR STORM WATER POLLUTION PREVENTION PLAN (SWPPP) SHALL BE MAINTAINED ON THE SITE AND AVAILABLE FOR REVIEW. THOSE ELEMENTS OF THE GRADING AND DRAINAGE PLAN PERTINENT TO OR REFERENCED ON THE SWPPP SHALL BE CONSIDERED A PART OF THE SWPPP.
2. THE ESC/SWPPP AND RELATED RECORDS MUST BE MADE AVAILABLE UPON REQUEST TO ADEQ AND THE CITY OF PRESCOTT.
3. THE IMPLEMENTATION OF THESE PLANS AND THE CONSTRUCTION, MAINTENANCE, REPLACEMENT, AND UPGRADING OF THESE FACILITIES IS THE RESPONSIBILITY OF THE PERMITTEE/CONTRACTOR UNTIL ALL CONSTRUCTION IS APPROVED AND A NOTICE OF TERMINATION HAS BEEN SUBMITTED.
4. THE SCHEMATIC EROSION CONTROL MEASURES SHOWN ON THE PLANS ARE A MINIMUM. THE CONTRACTOR SHALL PROVIDE ALL NECESSARY MEANS TO PROTECT EXISTING FACILITIES AND ADJACENT PROPERTIES FROM NOISE, DUST, AND STORM WATER RUNOFF THROUGHOUT CONSTRUCTION OF THE PROJECT AND BUILDINGS ON LOTS, AND SHALL CONDUCT HIS OPERATIONS IN SUCH A MANNER THAT STORM WATER WILL BE CONTAINED ON SITE OR CHANNELED INTO A STORM DRAIN SYSTEM, PROVIDED THAT IT IS FREE FROM POLLUTANTS AND DEBRIS.
5. CONTRACTOR SHALL PERMANENTLY STABILIZE ALL DISTURBED SLOPES AS STATED ON APPROVED CONSTRUCTION PLANS. ALL EROSION CONTROL STRUCTURES SHALL REMAIN IN PLACE UNTIL EXPOSED SLOPES HAVE BEEN PERMANENTLY STABILIZED.
6. CONTRACTOR SHALL TAKE MEASURES TO PREVENT OR MINIMIZE THE GENERATION, EMISSION AND/OR TRANSPORT OF FUGITIVE DUST FROM CONSTRUCTION ACTIVITIES.
7. THIS PLAN SHALL BE IN EFFECT UNTIL ALL DISTURBED AREAS ARE PERMANENTLY STABILIZED, TRANSFERRED TO NEW OWNERSHIP, OR DEVELOPED UNDER FUTURE PLANS WITH A NEW NOTICE OF INTENT (NOI), SWPPP, AND PERMIT. ONCE THE CONSTRUCTION ACTIVITIES HAVE BEEN COMPLETED AND THE SITE HAS MET THE FINAL STABILIZATION REQUIREMENTS OF THE PERMIT, THE AUTHORIZED SITE REPRESENTATIVE MAY FILE A NOTICE OR TERMINATION (NOT) WITH ADEQ, WITH A COPY SUBMITTED TO THE CITY OF PRESCOTT ENGINEERING DIVISION TO TERMINATE COVERAGE UNDER THE PERMIT.
8. A CONCRETE WASHOUT SHALL BE INSTALLED FOR ALL PROJECTS THAT PROPOSE CONCRETE TO BE MIXED ON SITE OR BE DELIVERED FROM A BATCH PLANT. THE CONCRETE WASHOUT SHALL BE LOCATED A MINIMUM OF FIFTY (50) FEET FROM ANY DRAINAGE INFRASTRUCTURE OR NATURAL DRAINAGE FEATURES OR WATER BODIES AND INCORPORATE AN IMPERMEABLE LINER TO CONTAIN THE REQUIRED VOLUME. ALL DRIED CONCRETE WASTE SHALL BE BROKEN INTO MANAGEABLE PIECES AND DISPOSED OF OFF-SITE AT AN APPROVED FACILITY.

COP STANDARD DETAIL	EROSION AND SEDIMENTATION CONTROL NOTES	Charles Andrews CITY ENGINEER	REVISED: 07/16	DETAIL No. 105P-2

1. THE CONTRACTOR SHALL SPOT LAYOUT THE ENTIRE PROJECT AND CONTACT THE CITY INSPECTOR TO MAKE ARRANGEMENTS FOR INSPECTION PRIOR TO INSTALLING TRAFFIC SIGNS OR PAVEMENT MARKINGS. ANY SIGNING OR STRIPING INSTALLED BEFORE LAYOUT APPROVAL SHALL BE SUBJECT TO REMOVAL AND REINSTALLATION AT THE CONTRACTOR'S EXPENSE.
2. TRAFFIC SIGN DIMENSIONS, COLORS AND LETTERING SHALL CONFORM TO THE LATEST MUTCD SPECIFICATIONS. TRAFFIC SIGN SIZE SHALL BE STANDARD UNLESS OTHERWISE SPECIFIED ON THE PLANS.
3. SIGN LOCATION SHALL BE COORDINATED WITH LANDSCAPING PLANS TO ENSURE SIGN VISIBILITY PER AASHTO STANDARDS.
4. ALL R1-1 "STOP" SIGNS AND PEDESTRIAN WARNING SIGNS SHALL BE RETRO-REFLECTIVE WITH SHEETING MATERIAL TO BE DIAMOND VIP GRADE, MEETING OR EXCEEDING ASTM 4956-04.
5. ALL OTHER SIGNS ARE TO BE RETRO-REFLECTIVE WITH SHEETING MATERIAL TO BE HIGH INTENSITY PRISMATIC MEETING OR EXCEEDING ASTM 4956-04.
6. SIGN BLANKS SHALL BE 5052-H38 ALLOY TREATED ALUMINUM WITH ALODINE 1200 CONVERSION COATING, 0.080" THICK WITH ROUNDED CORNERS.
7. SIGNS SHALL BE MOUNTED ON STREET LIGHT POLES WHENEVER FEASIBLE.
8. STRIPING SHALL CONFORM TO THE MOST RECENT EDITION OF THE MUTCD WITH REGARD TO SIZE, COLOR, REFLECTIVITY AND PLACEMENT UNLESS OTHERWISE SPECIFIED ON THE PLANS.
9. ALL THERMOPLASTIC APPLICATIONS SHALL CONFORM TO ADOT SPECIFICATION 704. TRANSVERSE MARKINGS, SYMBOLS AND LEGENDS SHALL BE 90 MIL (0.090 INCH) THICK, LONGITUDINAL MARKINGS SHALL BE 60 MIL (0.060 INCH) THICK ALKYD EXTRUDED THERMOPLASTIC.
10. ALL PAINT APPLICATION SHALL CONFORM TO ADOT SPECIFICATION 708.
11. ALL CONFLICTING STRIPING, PAVEMENT MARKINGS, AND CURB PAINT SHALL BE REMOVED BY WET SANDBLASTING OR OTHER APPROVED METHOD PRIOR TO THE INSTALLATION OF NEW STRIPING. SLURRY OR PAINT SHALL NOT BE USED TO COVER EXISTING PAINT. PAVEMENT THAT IS DAMAGED DUE TO THE REMOVAL OF MARKERS OR STRIPING SHALL BE REPAIRED TO THE SATISFACTION OF THE CITY ENGINEER OR HIS DESIGNEE.

COP STANDARD DETAIL	SIGNING AND STRIPING NOTES	Charles Andrews CITY ENGINEER	REVISED: 07/16	DETAIL No. 106P-1

APPROVED TRAFFIC CONTROL PLAN AND R.O.W. PERMIT MUST BE OBTAINED FROM PUBLIC WORKS PRIOR TO BEGINNING WORK IN THE R.O.W.

CITY OF PRESCOTT PUBLIC WORKS IS RESPONSIBLE FOR INSPECTION OF IMPROVEMENTS IN THE R.O.W. AND DESIGNATED PUBLIC UTILITY EASEMENTS ONLY. ALL OTHER IMPROVEMENTS (ON-SITE) SHALL BE INDEPENDENTLY INSPECTED.

SYMBOL AND LINETYPE LEGEND:

- FOUND MONUMENT
- FIRE HYDRANT
- WATER VALVE
- WATER METER BOX
- RPZ ASSEMBLY
- SEWER CLEANOUT
- SEWER BACKWATER VALVE
- SANITARY SEWER MANHOLE (SS)
- GAS METER
- EXISTING UTILITY POLE
- 8" S — 8" S — SEWER LINE (SIZE AS NOTED)
- 8" W — 8" W — WATER LINE (SIZE AS NOTED)
- G — G — G — GAS LINE
- E — E — E — ELECTRIC LINE
- OHE — OHE — OVERHEAD ELECTRIC LINE
- EX C — EX C — EX COMM LINE
- EX E — EX E — EX ELECTRIC LINE

EROSION CONTROL/SWPPP GENERAL NOTES

1. The Notice of Intent (NOI) shall be completed and submitted to the Arizona Department of Environmental Quality (ADEQ) prior to any construction activity (including clearing & grubbing and grading).
2. The prime contractor shall perform, at a minimum, a visual inspection of the construction site once every seven days and within 24 hours of rainfall greater than or equal to a half an inch (1/2-inch). The operator shall prepare a report documenting his/her findings on the conditions of the SWPPP controls and note any erosion problem areas. The operator's report is to be maintained on site by the operator. Facilities shall be maintained as necessary to ensure their continued functioning. In addition, all temporary siltation controls shall be maintained in a satisfactory condition until such time that construction is completed, permanent drainage facilities are operational, and the potential for erosion has passed as determined by the City Engineer or his designee.
3. The facilities shown on this plan must be constructed in conjunction with all clearing and grading activities in such a manner as to insure that sediment-laden water does not enter the drainage system or violate applicable water standards. Additionally, they must be installed and in operation prior to any grading or land clearing. Wherever possible, natural vegetation should be retained and maintained for silt and erosion control.
4. The general contractor to whom the "at-risk"/final grading permit will be issued must be included on the approved NOI issued by ADEQ.
5. The owner (operator)/contractor of the site must also maintain records with the following information:
   - The dates when major grading activities occur in a particular area;
   - The dates when construction activities cease in an area, temporarily or permanently; and
   - The dates when an area is stabilized, temporarily or permanently; and
   - The dates when any maintenance/replacement or removal of required BMP's.
6. Construction sites are dynamic in nature. The site operator is required to maintain full compliance with the general construction permit, as issued by ADEQ, to maintain an effective SWPPP. As such, this plan must be updated to accurately reflect site features and operations which may become evident during construction, and/or during or after rainfall events. The plan must also be amended if it is determined by the Design Engineer, or the City Engineer as not effective at minimizing pollutant discharges from the site.
7. Contractor shall hydro-seed all exposed slopes employing best management practices and/or recommended soil preparation to promote and sustain growth. All erosion control structures shall remain in place until exposed slopes have been permanently stabilized. Contractor shall be responsible for watering and maintaining hydro-seed until stabilized. Any deviation shall be approved by the engineer.
8. All site revegetation shall be completed within 90 days of completion of grading work, or prior to release of subdivision guarantee or issuance of Certificate of Occupancy, which ever occurs first. Permanent bank/slope stabilization shall be certified by the Project Engineer or Landscape Architect documenting the bank/slope stabilization was completed according to plan prior to final subdivision release or certificate of occupancy.
9. Contractor shall protect all permanent and existing storm water facilities from sediment/silt during construction.
10. Silt fencing and/or other sediment control (i.e. straw baffles, hay bales, etc.) shall be used at the toe of any erodible slope, following contours of slope (do not install silt fence across any drainage course).
11. Contractor to coordinate erosion control/SWPPP implementation with the City's environmental coordinator.

ABBREVIATION LEGEND:

DE	DRAINAGE EASEMENT
EC	EXISTING CONCRETE ELEVATION
EG	EXISTING GROUND ELEVATION
EP	EXISTING PAVEMENT
ETC	EXISTING TOP OF CURB
EX	EXISTING
FC	NEW FINISHED CONCRETE ELEVATION
FF	NEW FINISHED FLOOR ELEVATION
FG	NEW FINISHED GRADE ELEVATION
FL	NEW FLOWLINE ELEVATION
G/B	GRADE BREAK
H/P	HIGH POINT
INV	INVERT
L/P	LOW POINT
P	PAVEMENT OR FINISHED SURFACE
PUE	PUBLIC UTILITY EASEMENT
TC	NEW TOP OF CURB ELEVATION
TCE	TEMPORARY CONSTRUCTION EASEMENT
TW	NEW TOP OF WALL ELEVATION

Brown AND Caldwell

FOR CONSTRUCTION

Registered Professional Engineer (Civil) 22880 GARY R. KELLEY Date signed 8/9/23 ARIZONA, U.S.A.

CITY OF PRESCOTT ARIZONA

ZONE 41 PUMP STATION, TANK AND WATER MAIN

REVISIONS		
REV	DATE	DESCRIPTION

LINE IS 2 INCHES AT FULL SIZE

DESIGNED:	BWT
DRAWN:	BWT
CHECKED:	GRK
CHECKED:	
APPROVED:	

KWE PROJECT NUMBER 18-081

BC PROJECT NUMBER 152624

CLIENT PROJECT NUMBER CIP #17-009

GENERAL NOTES 2

DRAWING NUMBER

C-003

SHEET NUMBER 10 OF 84

Path: X:\KWE\PROJECTS\2018\18081 ZONE 41 FILENAME: 18081 NOTE SHEETS.DWG PLOT DATE: 8/9/2023 5:17 PM CAD USER: USER

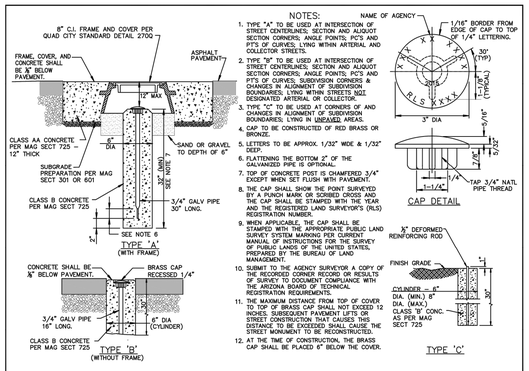

NOTES:

1. TYPE "A" TO BE USED AT INTERSECTION OF STREET CENTERLINES; SECTION AND ALIQUOT SECTION CORNERS; ANGLE POINTS; PC'S AND PT'S OF CURVES; LYING WITHIN ARTERIAL AND COLLECTOR STREETS.
2. TYPE "B" TO BE USED AT INTERSECTION OF STREET CENTERLINES; SECTION AND ALIQUOT SECTION CORNERS; ANGLE POINTS; PC'S AND PT'S OF CURVES; SUBDIVISION CORNERS & CHANGES IN ALIGNMENT OF SUBDIVISION BOUNDARIES; LYING WITHIN STREETS NOT DESIGNATED ARTERIAL OR COLLECTOR.
3. TYPE "C" TO BE USED AT CORNERS OF AND CHANGES IN ALIGNMENT OF SUBDIVISION BOUNDARIES; LYING IN UNPAVED AREAS.
4. CAP TO BE CONSTRUCTED OF RED BRASS OR BRONZE.
5. LETTERS TO BE APPROX. 1/32" WIDE & 1/32" DEEP.
6. FLATTENING THE BOTTOM 2" OF THE GALVANIZED PIPE IS OPTIONAL.
7. TOP OF CONCRETE POST IS CHAMFERED 3/4" EXCEPT WHEN SET FLUSH WITH PAVEMENT.
8. THE CAP SHALL SHOW THE POINT SURVEYED BY A PUNCH MARK OR SCRIBED CROSS AND THE CAP SHALL BE STAMPED WITH THE YEAR AND THE REGISTERED LAND SURVEYOR'S (RLS) REGISTRATION NUMBER.
9. WHEN APPLICABLE, THE CAP SHALL BE STAMPED WITH THE APPROPRIATE PUBLIC LAND SURVEY SYSTEM MARKING PER CURRENT MANUAL OF INSTRUCTIONS FOR THE SURVEY OF PUBLIC LANDS OF THE UNITED STATES, PREPARED BY THE BUREAU OF LAND MANAGEMENT.
10. SUBMIT TO THE AGENCY SURVEYOR A COPY OF THE RECORDED CORNER RECORD OR RESULTS OF SURVEY TO DOCUMENT COMPLIANCE WITH THE ARIZONA BOARD OF TECHNICAL REGISTRATION REQUIREMENTS.
11. THE MAXIMUM DISTANCE FROM TOP OF COVER TO TOP OF CAP SHALL NOT EXCEED 12 INCHES. SUBSEQUENT PAVEMENT LIFTS OR STREET CONSTRUCTION THAT CAUSES THIS DISTANCE TO BE EXCEEDED SHALL CAUSE THE STREET MONUMENT TO BE RECONSTRUCTED.
12. AT THE TIME OF CONSTRUCTION, THE BRASS CAP SHALL BE PLACED 6" BELOW THE COVER.

QUAD CITY STANDARD DETAIL | SURVEY MARKER | REVISED: 07/16 | DETAIL No. 120Q

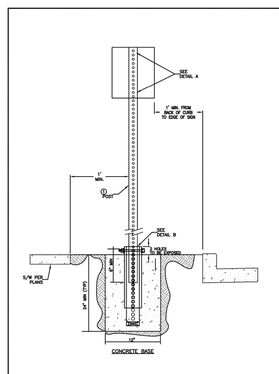

NOTES:

1. INSTALL ALL TRAFFIC SIGNS ON 12 GAUGE 2" SQUARE STEEL TUBING.
2. CONCRETE BASE 2' DEEP MIN. x 12" DIA. 12" LONG ANCHOR & 18" LONG ANCHOR FOR SIGNS WITH SIGN AREA GREATER THAN 12 SF.
3. POST ANCHOR SHALL HAVE 2 HOLES EXPOSED AT FINISHED GRADE.
4. ALL TRAFFIC SIGNS, WITH THE EXCEPTION OF R8-11 & DELINEATORS, SHALL BE SET AT A HEIGHT OF 7' TO BOTTOM OF SIGN. POSTS WITH R8-11 SIGNS SHALL BE SET AT A HEIGHT OF 5' TO THE BOTTOM OF SIGN. DELINEATORS SHALL BE MOUNTED AT A HEIGHT OF 4' TO THE BOTTOM OF THE SIGN. ALTERNATE HEIGHTS MUST BE APPROVED BY THE AGENCY ENGINEER PRIOR TO INSTALLATION.
5. BOLT FOR THE BASE TO BE PERPENDICULAR TO THE FLOW OF TRAFFIC.

QUAD CITY STANDARD DETAIL | SIGN POST INSTALLATION | REVISED: 07/16 | DETAIL No. 131Q

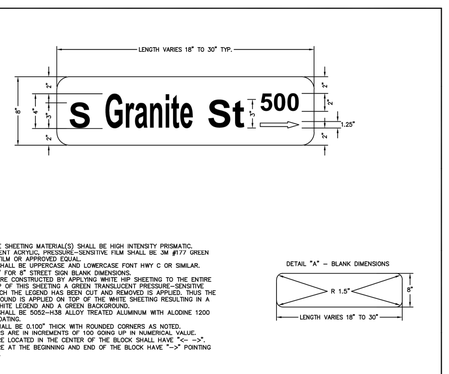

NOTES:

1. ALL REFLECTIVE SHEETING MATERIAL(S) SHALL BE HIGH INTENSITY PRISMATIC.
2. ALL TRANSPARENT ACRYLIC, PRESSURE-SENSITIVE FILM SHALL BE 3M #1177 GREEN ELECTRO CUT FILM OR APPROVED EQUAL.
3. LETTER FONT SHALL BE UPPERCASE AND LOWERCASE FONT HWY C OR SIMILAR.
4. SEE DETAIL "A" FOR 8" STREET SIGN BLANK DIMENSIONS.
5. THESE SIGNS ARE CONSTRUCTED BY APPLYING WHITE HIP SHEETING TO THE ENTIRE BLANK, ON TOP OF THIS SHEETING A GREEN TRANSLUCENT PRESSURE-SENSITIVE FILM FROM WHICH THE LEGEND HAS BEEN CUT AND REMOVED IS APPLIED, THUS THE GREEN BACKGROUND IS APPLIED ON TOP OF THE WHITE SHEETING RESULTING IN A SIGN WITH A WHITE LEGEND AND A GREEN BACKGROUND.
6. SIGN BLANKS SHALL BE 5052-H38 ALLOY TREATED ALUMINUM WITH ALODINE 1200 CONVERSION COATING.
7. SIGN BLANK SHALL BE 0.100" THICK WITH ROUNDED CORNERS AS NOTED.
8. BLOCK NUMBERS ARE IN INCREMENTS OF 100 GOING UP IN NUMERICAL VALUE.
9. SIGNS THAT ARE LOCATED IN THE CENTER OF THE BLOCK SHALL HAVE "<— —>".
10. SIGNS THAT ARE AT THE BEGINNING AND END OF THE BLOCK HAVE "—> " POINTING UP THE BLOCK.

QUAD CITY STANDARD DETAIL | STREET NAME SIGN | Charles Kwiatkowski CITY ENGINEER | REVISED: 07/16 | DETAIL No. 132P

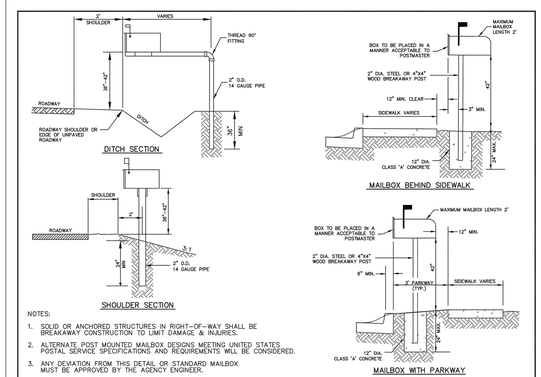

NOTES:

1. SOLID OR ANCHORED STRUCTURES IN RIGHT-OF-WAY SHALL BE BREAKAWAY CONSTRUCTION TO LIMIT DAMAGE & INJURIES.
2. ALTERNATE POST MOUNTED MAILBOX DESIGNS MEETING UNITED STATES POSTAL SERVICE SPECIFICATIONS AND REQUIREMENTS WILL BE CONSIDERED.
3. ANY DEVIATION FROM THIS DETAIL OR STANDARD MAILBOX MUST BE APPROVED BY THE AGENCY ENGINEER.

QUAD CITY STANDARD DETAIL | MAILBOX | REVISED: 07/16 | DETAIL No. 134Q-1

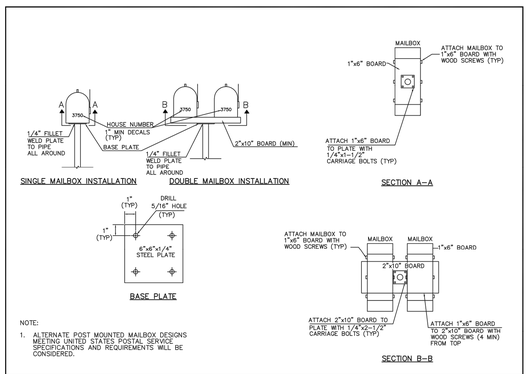

NOTE:

1. ALTERNATE POST MOUNTED MAILBOX DESIGNS MEETING UNITED STATES POSTAL SERVICE SPECIFICATIONS AND REQUIREMENTS WILL BE CONSIDERED.

QUAD CITY STANDARD DETAIL | MAILBOX | REVISED: 07/16 | DETAIL No. 134Q-2

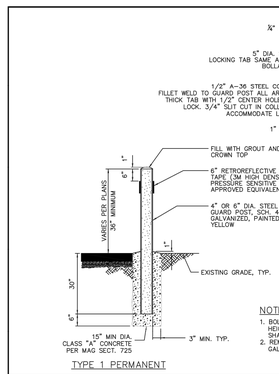

NOTES

1. BOLLARDS SHALL HAVE A HEIGHT OF 3 FEET OR BE EQUAL TO THE HEIGHT OF THE BACK SCREEN WALL OF BIN ENCLOSURES. POSTS SHALL BE PLACED A MINIMUM OF 4' FROM THE WALL.
2. REMOVABLE POST — GRIND SMOOTH ALL SHARP EDGES PRIOR TO GALVANIZATION. GALVANIZE PER ASTM A54 AFTER FABRICATION.

QUAD CITY STANDARD DETAIL | BOLLARD | REVISED: 07/16 | DETAIL No. 140Q

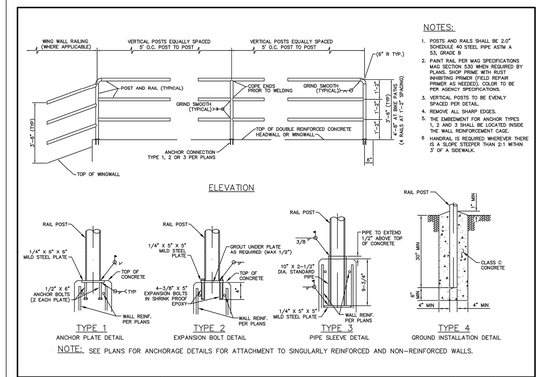

NOTES:

1. POSTS AND RAILS SHALL BE 2.0" NOMINAL SCH. 40 STEEL PIPE ASTM A 53, GRADE B.
2. PAINT RAIL PER MAG SPECIFICATIONS MAG SECTION 530 WHEN REQUIRED BY PLANS. SHOP PRIME WITH RUST INHIBITING PRIMER (FIELD REPAIR PRIMER AS NEEDED). COLOR TO BE PER AGENCY SPECIFICATIONS.
3. VERTICAL POSTS TO BE EVENLY SPACED PER DETAIL.
4. REMOVE ALL SHARP EDGES.
5. THE EMBEDMENT FOR ANCHOR TYPES 1, 2 AND 3 SHALL BE LOCATED INSIDE THE WALL REINFORCEMENT CAGE.
6. HANDRAIL IS REQUIRED WHENEVER THERE IS A DROP GREATER THAN 2:1 WITHIN 3' OF A SIDEWALK.

NOTE: SEE PLANS FOR ANCHORAGE DETAILS FOR ATTACHMENT TO SINGULARLY REINFORCED AND NON-REINFORCED WALLS.

QUAD CITY STANDARD DETAIL | SAFETY RAIL | REVISED: 07/16 | DETAIL No. 145Q

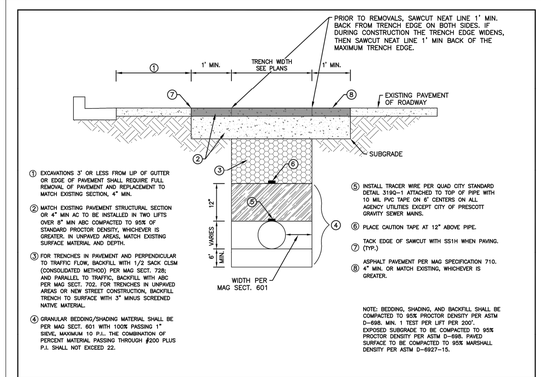

① EXCAVATIONS 3' OR LESS FROM LIP OF GUTTER OR EDGE OF PAVEMENT SHALL REQUIRE FULL REMOVAL OF PAVEMENT AND REPLACEMENT TO MATCH EXISTING SECTION, 4" MIN.

② MATCH EXISTING PAVEMENT STRUCTURAL SECTION OR 4" MIN AC TO BE INSTALLED IN TWO LIFTS OVER 6" MIN AGC COMPACTED TO 95% OF STANDARD PROCTOR DENSITY, WHICHEVER IS GREATER. IN UNPAVED AREAS, MATCH EXISTING SURFACE MATERIAL AND DEPTH.

③ FOR TRENCHES IN PAVEMENT AND PERPENDICULAR TO TRAFFIC FLOW, BACKFILL WITH 1/2 SACK CLSM (CONSOLIDATED METHOD) PER MAG SECT. 728; AND PARALLEL TO TRAFFIC, BACKFILL WITH ABC PER MAG SECT. 702. FOR TRENCHES IN UNPAVED AREAS OR NEW STREET CONSTRUCTION, BACKFILL TRENCH TO SURFACE WITH 3" MINUS SCREENED NATIVE MATERIAL.

④ GRANULAR BEDDING/SHADING MATERIAL SHALL BE PER MAG SECT. 601 WITH 100% PASSING 1" SIEVE, MAXIMUM 10 P.I. THE COMBINATION OF PERCENT MATERIAL PASSING THROUGH #200 PLUS P.I. SHALL NOT EXCEED 22.

⑤ INSTALL TRACER WIRE PER QUAD CITY STANDARD DETAIL 316Q-1 ATTACHED TO TOP OF PIPE WITH 10 MIL PVC TAPE ON 6' CENTERS ON ALL AGENCY UTILITIES EXCEPT CITY OF PRESCOTT GRAVITY SEWER MAINS.

⑥ PLACE CAUTION TAPE AT 12" ABOVE PIPE.

⑦ TACK EDGE OF SAWCUT WITH SS1H WHEN PAVING.

⑧ (TYP.)

ASPHALT PAVEMENT PER MAG SPECIFICATION 710.

⑨ 4" MIN. OR MATCH EXISTING, WHICHEVER IS GREATER.

NOTE: BEDDING, SHADING, AND BACKFILL SHALL BE COMPACTED TO 95% PROCTOR DENSITY PER ASTM D-698, MIN. 1 TEST PER LIFT PER 200'. EXPOSED SUBGRADE TO BE COMPACTED TO 95% PROCTOR DENSITY PER ASTM D-698. PAVED SURFACE TO BE COMPACTED TO 95% MARSHALL DENSITY PER ASTM D-6927-15.

QUAD CITY STANDARD DETAIL | TRENCH BACKFILL AND SURFACE REPLACEMENT | REVISED: 07/16 | DETAIL No. 200Q-1

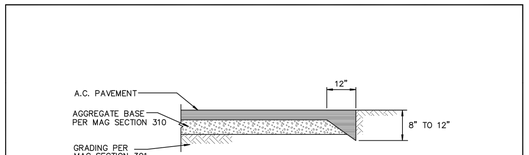

NOTES:

1. THICKENED EDGE REQUIRED AT ALL TRANSVERSE TERMINATIONS OF PAVING AND AT LONGITUDINAL EDGES FOR ASPHALT PAVEMENTS UNCONFINED BY CURB & GUTTER.
2. MATCHLINE TO EXISTING PAVEMENTS SHALL BE SKEWED OR OFFSET FOR SMOOTHER TRANSITION. LOCATION OF SAWCUT SHALL BE AS DIRECTED BY THE AGENCY ENGINEER OR HIS DESIGNEE.
3. EXISTING EDGES SHALL BE UNDISTURBED NATIVE, FIRM, & UNYIELDING SOIL OR FORMED TO PROVIDE FULLY COMPACTED STRAIGHT EDGES.

QUAD CITY STANDARD DETAIL | THICKENED EDGE PAVEMENT SECTION | REVISED: 07/16 | DETAIL No. 201Q

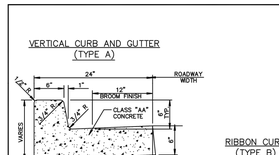

NOTES:

1. ALL EXPOSED SURFACES TO BE TROWEL FINISHED EXCEPT AS SHOWN. SEE MAG SECT. 340 & 505 & 725
2. HEIGHT OF TYPE 'A' CURB SHALL BE 6" UNLESS SPECIFIED ON PLANS
3. CONTRACTION JOINT SPACING 10' MAXIMUM
4. EXPANSION JOINTS AS PER MAG SECT. 340 50' MAX. AND AT P.C., DWY., ALLEYS & STRUCTURES
5. 4" MINIMUM OF ABC COMPACTED 95% PROCTOR SHALL EXTEND TO BACK OF CURB BELOW ALL CURB & GUTTER.
6. WHEN THE STANDARD PAVEMENT SECTION SLOPES AWAY FROM THE GUTTER, THE SLOPE OF THE GUTTER PAN SHALL MATCH PAVEMENT CROSS SLOPE.
7. ¾" ROUND FINISH SHALL BE REQUIRED AT LIP OF GUTTER, ALL DETAILS.
8. FINAL PAVEMENT SURFACE SHALL BE ¼" ABOVE GUTTERS EXCEPT TYPE D AND WHERE GUTTER SLOPES TOWARD PAVEMENT.
9. 3 — ¾"X12" DOWELS SHALL BE PLACED WHEN ATTACHING NEW CURB TO EXISTING CURB.

NOTES:

1. CONSTRUCT CURB AND INSTALL 1/2" MASTIC EXPANSION JOINTS, A.S.T.M. D-1751 AND MAG SECT. 340.
2. RIBBON CURB MAY SLOPE TOWARDS PAVEMENT OR PARKWAY AS INDICATED ON PLANS.

QUAD CITY STANDARD DETAIL | CURB AND GUTTER TYPES A, B, C AND D | REVISED: 07/16 | DETAIL No. 220Q-1

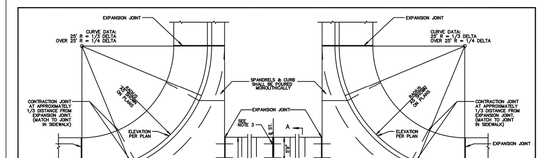

NOTES:

1. CONCRETE SHALL BE CLASS "AA" WITH SK ≥ 1¾" ENTRAINED AIR PORTLAND CEMENT CONCRETE 600 LBS. WITH 3/4" AGGREGATE MAX., 4000 P.S.I. AT 28 DAYS & SHALL HAVE A SLUMP OF NOT MORE THAN 4 INCHES, PER MAG SECT. 340 & 725.
2. EITHER CONSTRUCTION JOINT OR CONTRACTION JOINT IS REQUIRED AT CENTERLINE OF STREET.
3. A SEPARATE CONCRETE PAD IS REQUIRED WHEN VALLEY GUTTER IS POURED SEPARATELY OR HALF AT A TIME.
4. EXPANSION JOINTS SHALL CONFORM TO MAG SECT. 340.
5. NO CONCRETE SHALL BE PLACED PRIOR TO FORM INSPECTION BY THE AGENCY ENGINEER OR DESIGNEE.
6. A MINIMUM OF 8" ABC (OR PER GEOTECH ANALYSIS) COMPACTED TO 95% PROCTOR SHALL EXTEND BELOW GUTTER AND SPANDRELS.

QUAD CITY STANDARD DETAIL | 12' VALLEY GUTTER & SPANDRELS | REVISED: 07/16 | DETAIL No. 240Q-2

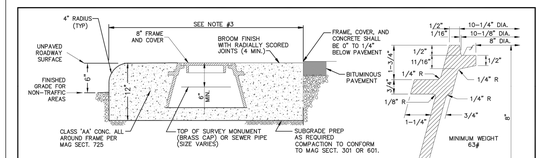

NOTES:

1. LETTERS ON COVER TO BE AS FOLLOWS: "SEWER", "PRIVATE SEWER", OR "SURVEY" AS DIRECTED. TOTAL WIDTH OF WORD "SEWER" = 3-1/4". TOTAL WIDTH OF WORD "SURVEY" = 4-1/2". LETTER SIZE: 5/8" x 3/4", RAISED 1/16" ABOVE LEVEL OF COVER, TYPE OF LETTERS TO BE SUBMITTED FOR APPROVAL.
2. U.S. MANUFACTURED IRON ONLY.
3. CONCRETE COLLAR SHALL BE 40" DIAMETER IN VEHICULAR TRAFFIC AREAS INCLUDING ALL EASEMENTS, AND 24" DIAMETER IN NON TRAFFIC AREAS.

1/32"
1/8" R
1/2"
3/8"
7/8"
1/2"
7-1/2" DIA.
10" DIA.
COVER SECTION A—A
DETAIL TYPICAL FOR BOTH FRAME AND COVER

QUAD CITY STANDARD DETAIL | 8" FRAME AND COVER | REVISED: 07/16 | DETAIL No. 270Q

SPECIAL NOTE:
THE STANDARD DETAILS AND SPECIFICATIONS SHOWN HEREON HAVE BEEN FORMALLY ADOPTED BY THE CITY OF PRESCOTT. COMPLIANCE WITH THESE STANDARD DETAILS AND SPECIFICATIONS IS REQUIRED IN CONSTRUCTING ALL APPLICABLE PUBLIC IMPROVEMENTS. KELLEY/WISE ENGINEERING IS NOT RESPONSIBLE FOR THE CONTENT OF THE CITY OF PRESCOTT STANDARD DETAILS AND SPECIFICATIONS.

Brown AND Caldwell

FOR CONSTRUCTION

Registered Professional Engineer (Civil) — 22880 GARY R. KELLEY — Date signed 4/1/24 — ARIZONA, U.S.A.

CITY OF PRESCOTT ARIZONA

ZONE 41 PUMP STATION, TANK AND WATER MAIN

REVISIONS

REV	DATE	DESCRIPTION

LINE IS 2 INCHES AT FULL SIZE

DESIGNED: BWT
DRAWN: BWT
CHECKED: GRK
CHECKED:
APPROVED:

KWE PROJECT NUMBER 18-081
BC PROJECT NUMBER 152624
CLIENT PROJECT NUMBER CIP #17-009

STANDARD DETAILS 1

DRAWING NUMBER
C-004
SHEET NUMBER 11 OF 84

Path: X:\KWE\PROJECTS\2018\18081 ZONE 41 FILENAME: 18081 DETAIL_SHEETS QCSD.DWG PLOT DATE: 8/9/2023 5:17 PM CAD USER: USER

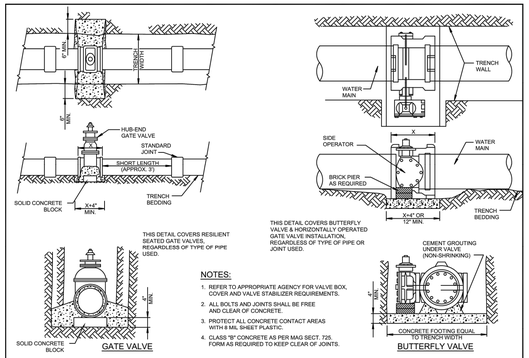

NOTES:

1. REFER TO APPROPRIATE AGENCY FOR VALVE BOX, COVER AND VALVE STABILIZER REQUIREMENTS.
2. ALL BOLTS AND JOINTS SHALL BE FREE AND CLEAR OF CONCRETE.
3. PROTECT ALL CONCRETE CONTACT AREAS WITH 8 MIL SHEET PLASTIC.
4. CLASS "B" CONCRETE AS PER MAG SECT. 725. FORM AS REQUIRED TO KEEP CLEAR OF JOINTS.

QUAD CITY STANDARD DETAIL | VALVE BLOCKING | REVISED: 07/16 | DETAIL No. 301Q

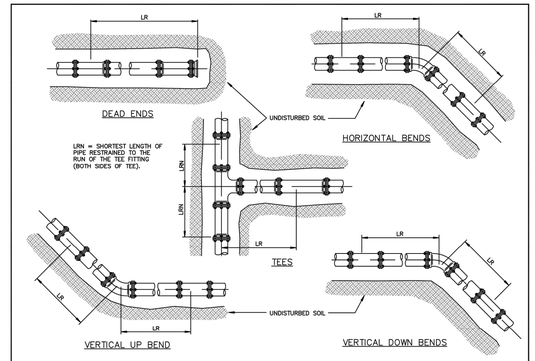

QUAD CITY STANDARD DETAIL | JOINT RESTRAINT FOR DUCTILE IRON AND POLYETHYLENE WRAPPED DUCTILE IRON WATER PIPES | REVISED: 07/16 | DETAIL No. 303Q-1

RESTRAINED LENGTHS, LR, FOR DUCTILE IRON PIPE

NOMINAL PIPE SIZE INCHES	HORIZONTAL BENDS			TEES		VERTICAL OFFSETS				VALVES & DEAD ENDS
						90° BEND FITTINGS		45° BEND FITTINGS	22-1/2° BEND FITTINGS	
	90°	45°	22-1/2°	LRN=0°	LRN=10°	DOWN BEND	UP BEND	DOWN BEND	UP BEND	DOWN BEND	UP BEND	
4	18	7	4	30	8	31	18	13	7	6	3	31
6	25	10	5	43	20	44	25	18	10	9	5	44
8	32	13	6	56	34	55	32	24	13	11	6	56
10	38	16	8	68	45	69	38	29	16	14	8	69
12	45	19	9	80	57	81	45	34	19	16	9	81
14	51	21	10	91	68	92	51	38	21	18	10	92
16	57	24	11	103	79	104	57	43	24	21	11	104
18	62	26	12	113	90	115	62	48	26	23	12	115
20	68	28	14	125	100	126	68	52	28	25	14	126
24	79	33	16	145	121	147	79	61	33	29	16	147

RESTRAINED LENGTHS, LR, FOR DUCTILE IRON PIPE WITH POLYETHYLENE WRAP OR PVC

NOMINAL PIPE SIZE INCHES	HORIZONTAL BENDS			TEES		VERTICAL OFFSETS				VALVES & DEAD ENDS
						90° BEND FITTINGS		45° BEND FITTINGS	22-1/2° BEND FITTINGS	
	90°	45°	22-1/2°	LRN=0°	LRN=10°	DOWN BEND	UP BEND	DOWN BEND	UP BEND	DOWN BEND	UP BEND	
4	26	11	5	69	18	72	26	30	11	14	5	72
6	36	15	7	99	47	102	36	42	15	20	7	102
8	47	19	9	130	78	133	47	55	19	26	9	133
10	56	23	11	157	103	159	56	66	23	32	11	159
12	65	27	13	185	131	187	65	77	27	37	13	187
14	74	31	15	211	156	214	74	89	31	42	15	214
16	82	34	16	238	183	241	82	100	34	48	16	241
18	90	37	18	263	207	266	90	110	38	53	18	266
20	98	41	20	289	233	292	98	121	41	58	20	292
24	113	47	22	337	280	340	113	141	47	68	22	340

NOTES:

1. ALL JOINTS WITHIN THE SPECIFIED LENGTH LR MUST BE RESTRAINED. ALL LENGTHS ARE GIVEN IN FEET.
2. THE MAXIMUM TEST PRESSURE SHALL NOT EXCEED 200 PSI
3. THE MINIMUM DEPTH OF BURY SHALL BE 4' TO TOP OF PIPE.

QUAD CITY STANDARD DETAIL | JOINT RESTRAINT FOR DUCTILE IRON AND POLYETHYLENE WRAPPED DUCTILE IRON WATER PIPES | REVISED: 07/16 | DETAIL No. 303Q-2

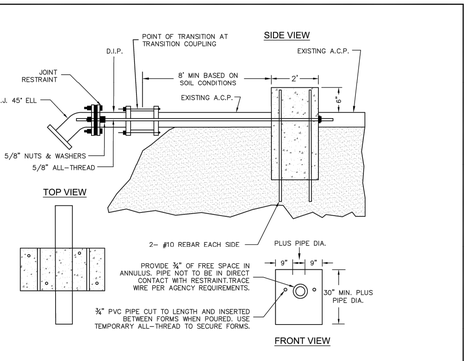

QUAD CITY STANDARD DETAIL | REVERSE THRUST BLOCK ACP | REVISED: 07/16 | DETAIL No. 303Q-3

PIPE SIZE	A	B	VERT HEIGHT	C	VOL CF	WEIGHT LBS	THRUST LBS
4" Ø	2'-0"	2'-0"	1'-0"	0.4FT	1.33	100	1519
6" Ø	2'-0"	2'-0"	1'-0"	0.4FT	1.33	100	2279
8" Ø	2'-0"	2'-0"	1'-0"	0.4FT	1.33	100	3038
10" Ø	2'-0"	2'-0"	1'-0"	0.4FT	1.33	100	3798
12" Ø	2'-0"	2'-0"	1'-0"	0.4FT	1.33	100	4558
14" Ø	2'-0"	2'-0"	1'-0"	0.4FT	1.33	100	5317
16" Ø	2'-0"	2'-0"	1'-0"	0.4FT	1.33	100	6077
18" Ø	2'-0"	2'-0"	1'-0"	0.4FT	1.33	100	6836
20" Ø	2'-0"	2'-0"	1'-0"	0.4FT	1.33	100	7596
24" Ø	2'-0"	2'-0"	1'-0"	0.4FT	1.33	100	9115

NOTES:
1. CONCRETE SHALL BE MAG CLASS "B".
2. THRUST BLOCKING SHALL BE PLACED UNDISTURBED EARTH EXCEPT WHERE FORMWORK IS A MUST. AFTER CONCRETE IS CURED THE FORMWORK SHALL BE REMOVED.
3. PIPE MUST BE DUCTILE IRON.
4. BASED ON 200 PSI TEST PRESSURE.
5. RETAINER GLAND OR MEGALUG OPTIONAL.
6. RETAINER GLAND = FORD SERIES 1200 mjRAINER RETAINER GLAND OR EQUAL (TYP).



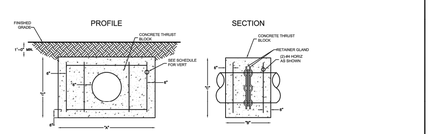

QUAD CITY STANDARD DETAIL | REVERSE THRUST BLOCK PVC - DIP | REVISED: 07/16 | DETAIL No. 303Q-4

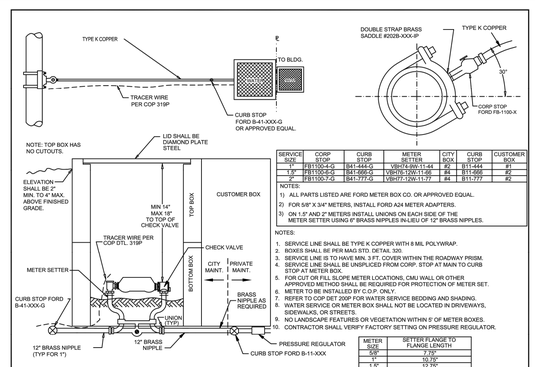

SERVICE SIZE	CORP STOP	CURB STOP	METER SETTER	CITY BOX	CURB STOP	CUSTOMER BOX
1"	FB1100-Q-G	B41-666-Q	VB607-699-11-44	#2	B11-444	#1
1.5"	FB1100-Q-G	B41-666-Q	VB607-700-11-66	#4	B11-666	#2
2"	FB1100-Q-G	B41-777-Q	VB607-1-200-11-77	#4	B11-777	#2

NOTES:
1) ALL PARTS LISTED ARE FORD METER BOX CO. OR APPROVED EQUAL.
2) FOR 5/8" X 3/4" METERS, INSTALL FORD A24 METER ADAPTERS.
3) ON 1.5" AND 2" METERS INSTALL UNIONS ON EACH SIDE OF THE METER SETTER USING 6" BRASS NIPPLES IN LIEU OF 12" BRASS NIPPLES.

METER SIZE	SETTER FLANGE TO FLANGE LENGTH
5/8"	7.75"
1"	10.75"
1.5"	12.75"
2"	17.25"

NOTES:
1. SERVICE LINE SHALL BE TYPE K COPPER WITH 8 MIL POLYWRAP.
2. BOXES SHALL BE PER MAG STD. DETAIL 320.
3. SERVICE LINE IS TO HAVE MIN. 3 FT. COVER WITHIN THE ROADWAY PRISM.
4. SERVICE LINE SHALL BE UNSPLICED FROM CORP. STOP AT MAIN TO CURB STOP AT METER.
5. FOR CUT OR FILL SLOPE METER LOCATIONS, CMU WALL OR OTHER APPROVED METHOD SHALL BE REQUIRED FOR PROTECTION OF METER SET.
6. METER TO BE INSTALLED BY C.O.P. ONLY.
7. REFER TO COP DET 200P FOR WATER SERVICE BEDDING AND SHADING.
8. WATER SERVICE OR METER BOX SHALL NOT BE LOCATED IN DRIVEWAYS, SIDEWALKS, OR STREETS.
9. NO LANDSCAPE FEATURES OR VEGETATION WITHIN 5' OF METER BOXES.
10. CONTRACTOR SHALL VERIFY FACTORY SETTING ON PRESSURE REGULATOR.

COP STANDARD DETAIL | 1" - 2" WATER SERVICE CONNECTIONS | Charles Vandervoet CITY ENGINEER | REVISED: 07/16 | DETAIL No. 316P

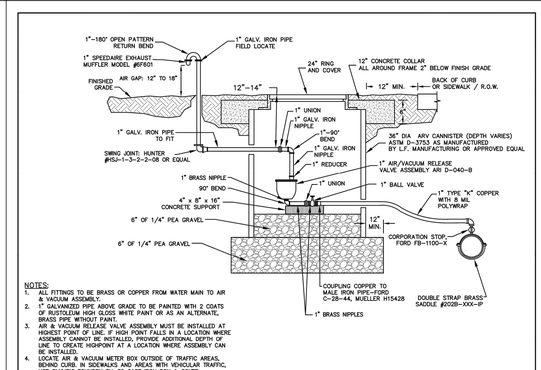

NOTES:
1. ALL FITTINGS TO BE BRASS OR COPPER FROM WATER MAIN TO AIR & VACUUM ASSEMBLY.
2. 1" GALVANIZED PIPE ABOVE GRADE TO BE PAINTED WITH 2 COATS OF RUSTOLEUM HIGH GLOSS WHITE PAINT OR AS AN ALTERNATE, BRASS PIPE WITHOUT PAINT.
3. AIR & VACUUM RELEASE VALVE ASSEMBLY MUST BE INSTALLED AT HIGHEST POINT OF LINE. IF HIGH POINT FALLS IN A LOCATION WHERE ASSEMBLY CANNOT BE INSTALLED, PROVIDE ADDITIONAL DEPTH OF LINE TO CREATE HIGHPOINT AT A LOCATION WHERE ASSEMBLY CAN BE INSTALLED.
4. LOCATE AIR & VACUUM METER BOX OUTSIDE OF TRAFFIC AREAS, BEHIND CURB IN SIDEWALKS AND AREAS WITH VEHICULAR TRAFFIC, USE CL1MPIC FOUNDRY SM–30 CAST IRON BOX & COVER.

QUAD CITY STANDARD DETAIL | 1" AIR VACUUM RELEASE VALVE ASSEMBLY | REVISED: 07/16 | DETAIL No. 317Q-1

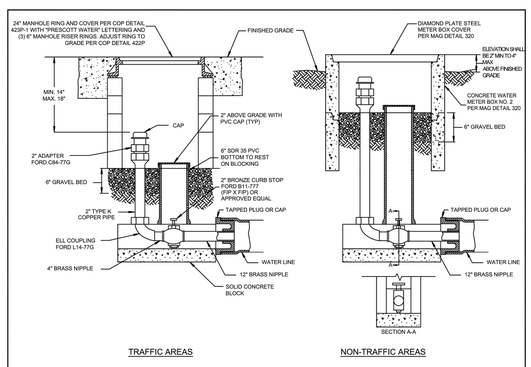

COP STANDARD DETAIL | BLOW OFF | Charles Vandervoet CITY ENGINEER | REVISED: 07/16 | DETAIL No. 318P

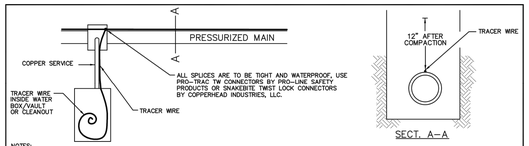

NOTES:

1. TRACER WIRE SHALL BE REQUIRED FOR ALL PRESSURE PIPE INSTALLATION AS INDICATED ON OTHER STANDARD DETAILS. TRACER WIRE SHALL BE #14 AWG HS–CCS, 30 MIL HDPE INSULATION.
2. FINAL CONTINUITY TESTING FOR ACCEPTANCE OF TRACER WIRE SHALL BE MADE AT PROJECT COMPLETION.
3. WIRE IS TO BE ATTACHED TO ALL APPURTENANCES.
4. TRACER WIRE IS TO BE PLACED AT TOP CENTER OF PIPE AND SECURED BY TAPE AT A MINIMUM OF 6' INTERVALS.
5. THIS DETAIL DOES NOT PERTAIN TO STRAIGHT RUN GRAVITY SANITARY SEWER MAINS IN THE CITY OF PRESCOTT.
6. TRACER WIRE STATION SHALL BE USED AT ALL FIRE HYDRANTS, SEWER WET WELLS, FORCE MAIN DISCHARGE MANHOLES, FORCE MAIN CLEANOUTS, FORCE MAIN VALVE LOCATIONS AND LOW PRESSURE SEWER MAIN APPURTENANCES IN ACCORDANCE WITH QUAD CITY STANDARD DETAIL 319Q–2.
7. PASS A CONTINUITY TEST, CONDUCTED BY THE CONTRACTOR AND WITNESSED BY THE ENGINEER OF RECORD (EOR) AND THE AGENCY REPRESENTATIVE. THE EOR SHALL PROVIDE A CERTIFICATION OF PASSING TO THE CONTRACTOR AND AGENCY.
8. TO PASS A CONTINUITY TEST, THE FOLLOWING CONDITIONS MUST BE MET:
   1. CONTINUITY TEST SHALL BE PERFORMED BY USING A METALLIC LOCATOR WITH AUDIBLE TONE AND NUMERIC VALUES FOR CERTIFICATION OF FACILITY LOCATIONS AND SHALL BE IDENTIFIABLE BETWEEN ACCESS POINTS.
   2. THE WIRE SHALL BE ACCESSIBLE AT ALL ACCESS POINTS AND FROM ACCESS POINT TO ACCESS POINT.
   3. DEPTH READINGS MUST BE ACCURATE AND CONSISTENT TO WITHIN 15 (DEPTH TO DIAMETER RATIO).
   4. ACCESS POINTS THAT ARE WIDELY SPACED CAN BE TRACED IN WORST CASE FROM EACH END TO A COMMON MEETING POINT BETWEEN THEM.
9. CONTRACTOR MUST PROVIDE EOR AND TOWN WITH THE FOLLOWING:
   1. SAMPLE OF WIRE.
   2. SAMPLE OF CONNECTOR.
   3. INVOICE COPY SHOWING PURCHASE OF WIRE AND CONNECTOR.

DETECTABLE TAPE SHALL BE:
1. PRO–LINE SAFETY PRODUCTS OR HYTECH DETECTABLE TAPE (UNDERGROUND WARNING TAPE). NO EXCEPTIONS.
2. 3 INCHES IN WIDTH
3. 5 MIL OVERALL THICKNESS WITH A .35 MIL SOLID ALUMINUM FOIL CORE,
4. CONSTRUCTED WITH A .8 MIL CLEAR FILM, REVERSE PRINTED WITH A REPEATING WARNING MESSAGE AND LAMINATE TO ALUMINUM FOIL WITH A .3.75 MIL CLEAR FILM BACKING.
5. LETTERED WITH A MINIMUM OF 1" INCH.
6. COLOR CODED FOR SPECIFIC UTILITY: WATER – BLUE, SANITARY SEWER – GREEN, RECLAIMED WATER – PURPLE IN ACCORDANCE WITH APWA UNIFORM COLOR CODE.
7. CONTRACTOR MUST PROVIDE EOR AND AGENCY WITH THE FOLLOWING:
   1. SAMPLE OF TAPE.
   2. INVOICE COPY SHOWING PURCHASE OF WIRE AND CONNECTOR.

QUAD CITY STANDARD DETAIL | TRACER WIRE | REVISED: 07/16 | DETAIL No. 319Q-1

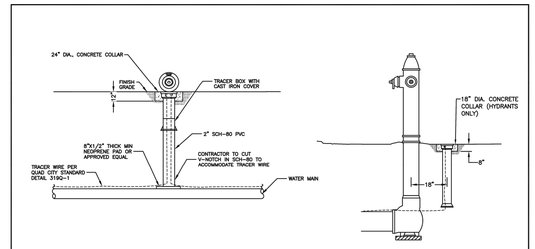

NOTES:

1. TRACER BOX AND CAST IRON COVER SHALL BE COPPERHEAD INDUSTRIES, LLC SNAKEBITE COMPOSITE EQUAL TO TB1.4"TP OR CD14"SP AS APPROPRIATE, LID COLOR SHALL COINCIDE WITH TYPE OF UTILITY.
2. MAXIMUM DISTANCE BETWEEN TRACER WIRE POINT OF CONTACT SHALL BE 500'.
3. ATTACH TRACER WIRE TO PIPE AT 6' INTERVALS.

QUAD CITY STANDARD DETAIL | TRACER WIRE STATION | REVISED: 07/16 | DETAIL No. 319Q-2

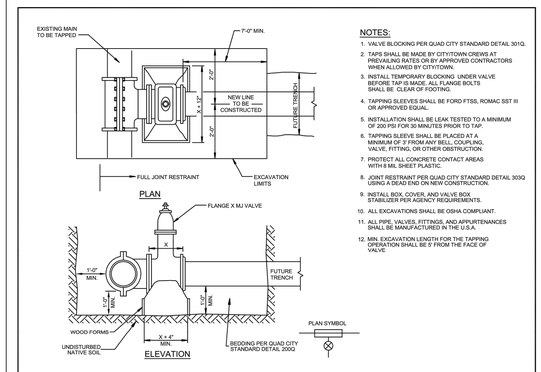

NOTES:

1. VALVE BLOCKING PER QUAD CITY STANDARD DETAIL 301Q.
2. TAPS SHALL BE MADE BY CITY/TOWN CREWS AT PREVAILING RATES OR BY APPROVED CONTRACTORS WHEN ALLOWED BY CITY/TOWN.
3. INSTALL TEMPORARY BLOCKING UNDER VALVE BEFORE TAP IS MADE. ALL FLANGE BOLTS SHALL BE CLEAR OF FOOTING.
4. TAPPING SLEEVES SHALL BE FORD FTSS, ROMAC SST III OR APPROVED EQUAL.
5. INSTALLATION SHALL BE LEAK TESTED TO A MINIMUM OF 200 PSI FOR 30 MINUTES PRIOR TO TAP.
6. TAPPING SLEEVE SHALL BE PLACED AT A MINIMUM OF 3' FROM ANY BELL, COUPLING, VALVE, FITTING, OR OTHER OBSTRUCTION.
7. PROTECT ALL CONCRETE CONTACT AREAS WITH 8 MIL SHEET PLASTIC.
8. JOINT RESTRAINT PER QUAD CITY STANDARD DETAIL 303Q USING A DEAD END ON NEW CONSTRUCTION.
9. INSTALL BOX, COVER, AND VALVE BOX STABILIZER PER AGENCY REQUIREMENTS.
10. ALL EXCAVATIONS SHALL BE OSHA COMPLIANT.
11. ALL PIPE, VALVES, FITTINGS, AND APPURTENANCES SHALL BE MANUFACTURED IN THE U.S.A.
12. MIN. EXCAVATION LENGTH FOR THE TAPPING OPERATION SHALL BE 5' FROM THE FACE OF VALVE

QUAD CITY STANDARD DETAIL | TAPPING SLEEVES AND VALVES | REVISED: 07/16 | DETAIL No. 340Q-1

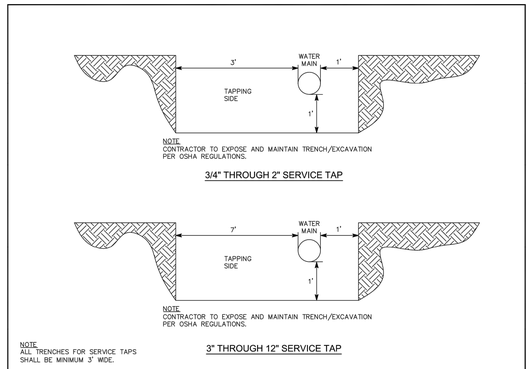

NOTE
ALL TRENCHES FOR SERVICE TAPS SHALL BE MINIMUM 3' WIDE.

QUAD CITY STANDARD DETAIL | EXPOSING WATER MAIN FOR HOT TAP | REVISED: 07/16 | DETAIL No. 340Q-2

SPECIAL NOTE:
THE STANDARD DETAILS AND SPECIFICATIONS SHOWN HEREON HAVE BEEN FORMALLY ADOPTED BY THE CITY OF PRESCOTT. COMPLIANCE WITH THESE STANDARD DETAILS AND SPECIFICATIONS IS REQUIRED IN CONSTRUCTING ALL APPLICABLE PUBLIC IMPROVEMENTS. KELLEY/WISE ENGINEERING IS NOT RESPONSIBLE FOR THE CONTENT OF THE CITY OF PRESCOTT STANDARD DETAILS AND SPECIFICATIONS.

Brown AND Caldwell

FOR CONSTRUCTION

Registered Professional Engineer (Civil) 22880 GARY R. KELLEY Date signed 6/9/23 ARIZONA, U.S.A.

CITY OF PRESCOTT ARIZONA

ZONE 41 PUMP STATION, TANK AND WATER MAIN

REVISIONS

REV	DATE	DESCRIPTION

LINE IS 2 INCHES AT FULL SIZE

DESIGNED: BWT
DRAWN: BWT
CHECKED: GRK
CHECKED:
APPROVED:

KWE PROJECT NUMBER 18-081
BC PROJECT NUMBER 152624
CLIENT PROJECT NUMBER CIP #17-009

STANDARD DETAILS 2

DRAWING NUMBER
C-005

SHEET NUMBER
12 OF 84

Path: X:\KWE\PROJECTS\2018\18081 ZONE 41 FILENAME: 18081 DETAIL_SHEETS QCSD.DWG PLOT DATE: 8/9/2023 5:17 PM CAD USER: USER

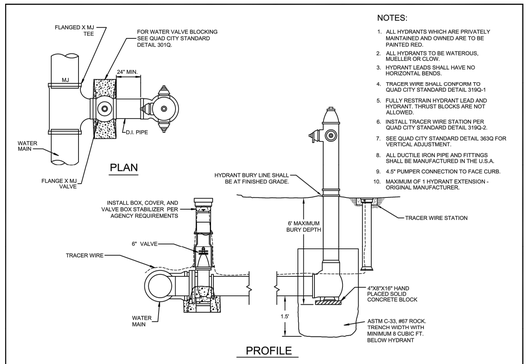

NOTES:

1. ALL HYDRANTS WHICH ARE PRIVATELY MAINTAINED AND OWNED ARE TO BE PAINTED RED.
2. ALL HYDRANTS TO BE WATEROUS, MUELLER OR CLOW.
3. HYDRANT LEADS SHALL HAVE NO HORIZONTAL BENDS.
4. TRACER WIRE SHALL CONFORM TO QUAD CITY STANDARD DETAIL 319Q-1
5. FULLY RESTRAIN HYDRANT LEAD AND HYDRANT. THRUST BLOCKS ARE NOT ALLOWED.
6. INSTALL TRACER WIRE STATION PER QUAD CITY STANDARD DETAIL 319Q-2.
7. SEE QUAD CITY STANDARD DETAIL 363Q FOR VERTICAL ADJUSTMENT.
8. ALL DUCTILE IRON PIPE AND FITTINGS SHALL BE MANUFACTURED IN THE U.S.A.
9. 4.5" PUMPER CONNECTION TO FACE CURB.
10. MAXIMUM OF 1 HYDRANT EXTENSION - ORIGINAL MANUFACTURER.

QUAD CITY STANDARD DETAIL	FIRE HYDRANT INSTALLATION	REVISED: 07/16	DETAIL No. 360Q

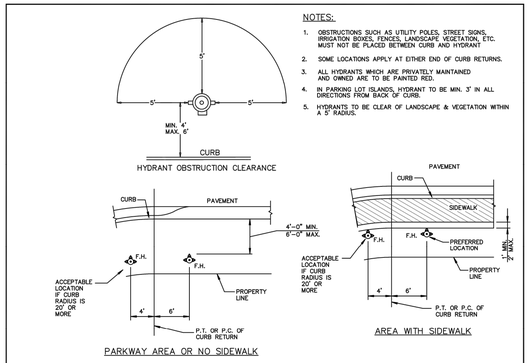

NOTES:

1. OBSTRUCTIONS SUCH AS UTILITY POLES, STREET SIGNS, IRRIGATION BOXES, FENCES, LANDSCAPE VEGETATION, ETC. MUST NOT BE PLACED BETWEEN CURB AND HYDRANT
2. SOME LOCATIONS APPLY AT EITHER END OF CURB RETURNS.
3. ALL HYDRANTS WHICH ARE PRIVATELY MAINTAINED AND OWNED ARE TO BE PAINTED RED.
4. IN PARKING LOT ISLANDS, HYDRANT TO BE MIN. 3' IN ALL DIRECTIONS FROM BACK OF CURB.
5. HYDRANTS TO BE CLEAR OF LANDSCAPE & VEGETATION WITHIN A 5' RADIUS.

QUAD CITY STANDARD DETAIL	LOCATIONS FOR NEW FIRE HYDRANTS	REVISED: 07/16	DETAIL No. 362Q

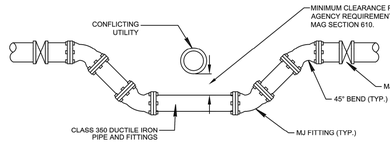

1. ALL PIPE, VALVES, FITTINGS, AND APPURTENANCES SHALL BE MANUFACTURED IN THE U.S.A.
2. ENTIRE VERTICAL REALIGNMENT SHALL BE MECHANICALLY RESTRAINED CL. 350 D.I.P. PER QUAD CITY DETAILS 303Q-1 AND 303Q-2. RESTRAINED LENGTHS FROM VALVES SHALL BE THE SAME AS DEAD ENDS ON NEW CONSTRUCTION.
3. BOTTOM OF VERTICAL ALIGNMENT SHALL BE ONE PIECE. IF JOINTS ARE REQUIRED, WATER MAIN SEGMENT SHALL BE CENTERED BELOW PIPE OR IN A CASING PIPE.
4. NO SERVICE CONNECTIONS SHALL BE LOCATED WITHIN VERTICAL REALIGNMENT
5. AIR RELEASE VALVE TO BE INSTALLED ON THE VERTICAL REALIGNMENT AT THE HIGH POINT OF THE LOW SIDE.
6. VALVE(S) AND BLOCKING PER QUAD CITY STANDARD DETAIL 301Q (MJ VALVE, TYP.)

QUAD CITY STANDARD DETAIL	VERTICAL REALIGNMENT OF WATER MAINS	REVISED: 07/16	DETAIL No. 370Q

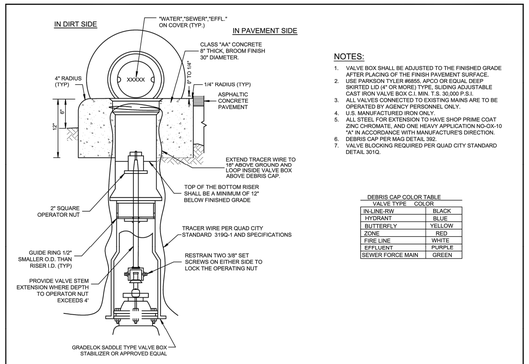

NOTES:

1. VALVE BOX SHALL BE ADJUSTED TO THE FINISHED GRADE AFTER PLACING OF THE FINISH PAVEMENT SURFACE.
2. USE PARKSON TYLER #6855, APCO OR EQUAL DEEP SKIRTED LID (4" OR MORE) TYPE, SLIDING ADJUSTABLE CAST IRON VALVE BOX C.I. MIN. T.S. 30,000 P.S.I.
3. ALL VALVES CONNECTED TO EXISTING MAINS ARE TO BE OPERATED BY AGENCY PERSONNEL ONLY.
4. U.S. MANUFACTURED IRON ONLY.
5. ALL STEEL FOR EXTENSION TO HAVE SHOP PRIME COAT ZINC CHROMATE, AND ONE HEAVY APPLICATION NO-OX-10 "X" IN ACCORDANCE WITH MANUFACTURE'S DIRECTION.
6. DEBRIS CAP PER MAG DETAIL 392.
7. VALVE BLOCKING REQUIRED PER QUAD CITY STANDARD DETAIL 301Q.

DEBRIS CAP COLOR TABLE

VALVE TYPE	COLOR
IN-LINE-RW	BLACK
HYDRANT	BLUE
BUTTERFLY	YELLOW
ZONE	RED
FIRE LINE	WHITE
EFFLUENT	PURPLE
SEWER FORCE MAIN	GREEN

QUAD CITY STANDARD DETAIL	VALVE BOX	REVISED: 07/16	DETAIL No. 391Q

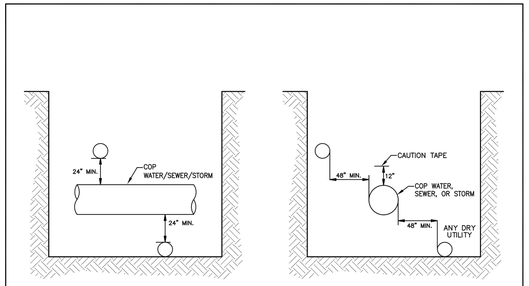

COP STANDARD DETAIL	DRY UTILITY SEPARATION	Charles Anderson CITY ENGINEER	REVISED: 07/16	DETAIL No. 402P

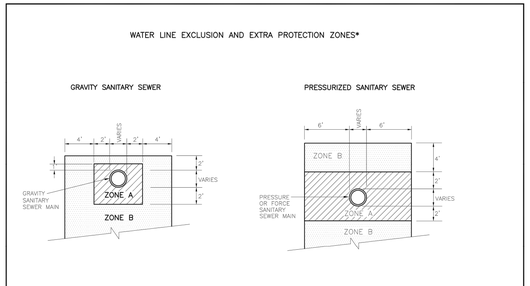

NOTES:
ZONE A: NO WATER LINES ALLOWED/MINIMUM SEPARATION.
ZONE B: EXTRA PROTECTION REQUIRED FOR WATER LINES.
* REFER TO MAG SPECIFICATION SECTION 610, WATER LINE CONSTRUCTION.

COP STANDARD DETAIL	WATER AND SANITARY SEWER SEPARATION/PROTECTION	Charles Anderson CITY ENGINEER	REVISED: 07/16	DETAIL No. 404P-1

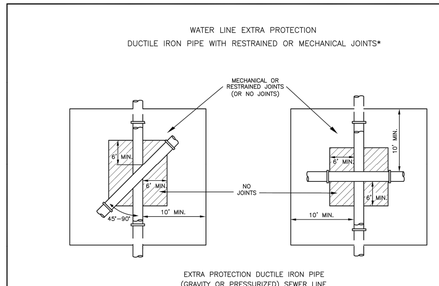

NOTES:
* REFER TO MAG STANDARD SPECIFICATION SECTION 610.

COP STANDARD DETAIL	WATER AND SANITARY SEWER SEPARATION/PROTECTION	Charles Anderson CITY ENGINEER	REVISED: 07/16	DETAIL No. 404P-2

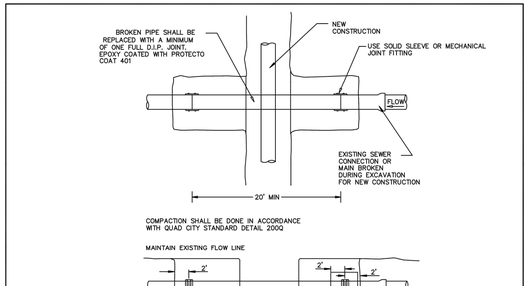

QUAD CITY STANDARD DETAIL	BROKEN SEWER LINE REPLACEMENT	REVISED: 07/16	DETAIL No. 405Q

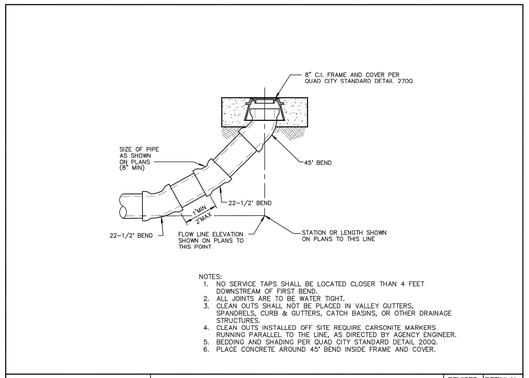

NOTES:
1. NO SERVICE TAPS SHALL BE LOCATED CLOSER THAN 4 FEET DOWNSTREAM OF FIRST BEND.
2. ALL JOINTS ARE TO BE WATER TIGHT.
3. CLEAN OUTS SHALL NOT BE PLACED IN VALLEY GUTTERS, SPANDRELS, CURB & GUTTERS, CATCH BASINS, OR OTHER DRAINAGE STRUCTURES.
4. CLEAN OUTS INSTALLED OFF SITE REQUIRE CARSONITE MARKERS RUNNING PARALLEL TO THE LINE, AS DIRECTED BY AGENCY ENGINEER.
5. BEDDING AND SHADING PER QUAD CITY STANDARD DETAIL 200Q.
6. PLACE CONCRETE AROUND 45° BEND INSIDE FRAME AND COVER.

QUAD CITY STANDARD DETAIL	SEWER MAIN CLEANOUT	REVISED: 07/16	DETAIL No. 441Q

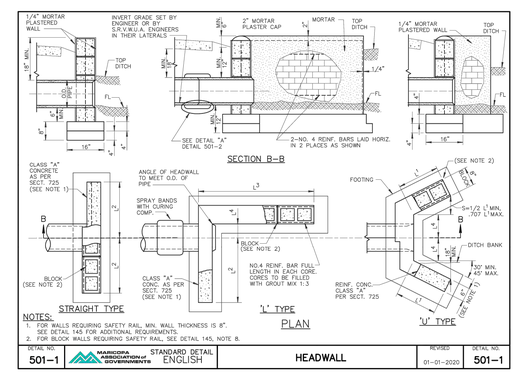

NOTES:
1. FOR WALLS REQUIRING SAFETY RAIL, MIN. WALL THICKNESS IS 8". SEE DETAIL 145 FOR ADDITIONAL REQUIREMENTS.
2. FOR BLOCK WALLS REQUIRING SAFETY RAIL, SEE DETAIL 145, NOTE 8.

DETAIL NO. 501-1	MARICOPA ASSOCIATION of GOVERNMENTS STANDARD DETAIL ENGLISH	HEADWALL	REVISED 01-01-2020	DETAIL NO. 501-1

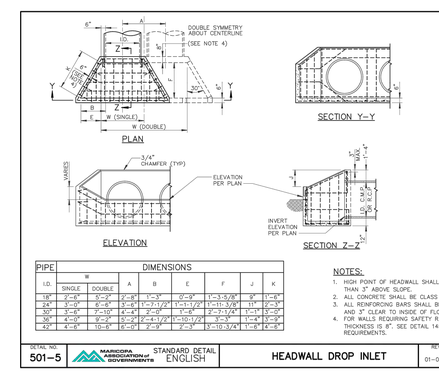

PIPE I.D.	DIMENSIONS W SINGLE	W DOUBLE	A	B	E	F	J	K
18"	2'-6"	5'-2"	2'-8"	1'-3"	0'-9"	1'-3-5/8"	9"	1'-6"
24"	3'-0"	6'-8"	3'-6"	1'-7-1/2"	1'-1-1/2"	1'-11-3/8"	11"	2'-3"
30"	3'-6"	7'-10"	4'-4"	2'-0"	1'-6"	2'-7-1/4"	1'-1"	2'-9"
36"	4'-0"	9'-2"	5'-2"	2'-4-1/2"	1'-10-1/2"	3'-3"	1'-4"	3'-3"
42"	4'-6"	10'-6"	6'-0"	2'-9"	2'-3"	13'-10-3/4"	1'-6"	4'-0"

NOTES:
1. HIGH POINT OF HEADWALL SHALL NOT PROJECT MORE THAN 3" ABOVE SLOPE.
2. ALL CONCRETE SHALL BE CLASS "A" PER SECT. 725.
3. ALL REINFORCING BARS SHALL BE NO. 4, 12" C TO C AND 3" CLEAR TO INSIDE OF FLOOR AND WALLS.
4. FOR WALLS REQUIRING SAFETY RAIL, MIN. WALL THICKNESS IS 8". SEE DETAIL 145 FOR ADDITIONAL REQUIREMENTS.

DETAIL NO. 501-5	MARICOPA ASSOCIATION of GOVERNMENTS STANDARD DETAIL ENGLISH	HEADWALL DROP INLET	REVISED 01-01-2020	DETAIL NO. 501-5

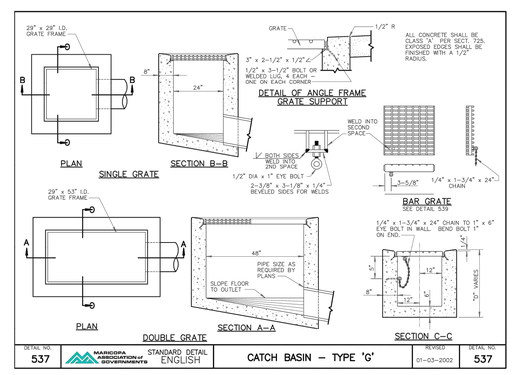

DETAIL NO. 537	MARICOPA ASSOCIATION of GOVERNMENTS STANDARD DETAIL ENGLISH	CATCH BASIN – TYPE 'G'	REVISED 01-03-2002	DETAIL NO. 537

SPECIAL NOTE:
THE STANDARD DETAILS AND SPECIFICATIONS SHOWN HEREON HAVE BEEN FORMALLY ADOPTED BY THE CITY OF PRESCOTT. COMPLIANCE WITH THESE STANDARD DETAILS AND SPECIFICATIONS IS REQUIRED IN CONSTRUCTING ALL APPLICABLE PUBLIC IMPROVEMENTS. KELLEY/WISE ENGINEERING IS NOT RESPONSIBLE FOR THE CONTENT OF THE CITY OF PRESCOTT STANDARD DETAILS AND SPECIFICATIONS.

Brown AND Caldwell

FOR CONSTRUCTION

Registered Professional Engineer (Civil) — 22880 GARY R. KELLEY — Date signed 6/1/23 — ARIZONA, U.S.A.

CITY OF PRESCOTT ARIZONA

ZONE 41 PUMP STATION, TANK AND WATER MAIN

REVISIONS

REV	DATE	DESCRIPTION

LINE IS 2 INCHES AT FULL SIZE

DESIGNED: BWT
DRAWN: BWT
CHECKED: GRK
CHECKED:
APPROVED:

KWE PROJECT NUMBER 18-081
BC PROJECT NUMBER 152624
CLIENT PROJECT NUMBER CIP #17-009

STANDARD DETAILS 3

DRAWING NUMBER
C-006

SHEET NUMBER 13 OF 84

Path: X:\KWE\PROJECTS\2018\18081 ZONE 41 FILENAME: 18081 DETAIL_SHEETS QCSD.DWG PLOT DATE: 8/9/2023 5:17 PM CAD USER: USER

EROSION CONTROL/SWPPP GENERAL NOTES

1. The contractor shall prepare the SWPPP including completing and submitting the Notice of Intent (NOI) to the Arizona Department of Environmental Quality (ADEQ) prior to any construction activity.

2. The prime contractor shall perform, at a minimum, a visual inspection of the construction site once every seven days and within 24 hours of rainfall greater than or equal to a half an inch (1/2–inch). The operator shall prepare a report documenting his/her findings on the conditions of the SWPPP controls and note any erosion problem areas. The operator's report is to be maintained on site by the operator. Facilities shall be maintained as necessary to ensure their continued functioning. In addition, all temporary siltation controls shall be maintained in a satisfactory condition until such time that construction is completed, permanent drainage facilities are operational, and the potential for erosion has passed as determined by the City Engineer or his designee.

3. The prime contractor or owner shall amend this plan as necessary during the course of construction to resolve any problem areas, which become evident during the construction and/or during rainfalls.

4. The facilities shown on this plan must be constructed in conjunction with all clearing and grading activities in such a manner as to insure that sediment–laden water does not enter the drainage system or violate applicable water standards. Additionally, they must be installed and in operation prior to any grading or land clearing. Wherever possible, natural vegetation should be retained and maintained for silt and erosion control.

5. The contractor to whom the "at–risk"/final grading permit will be issued must be included on the approved NOI issued by ADEQ.

6. The owner (operator)/contractor of the site must also maintain records with the following information:
   –The dates when major grading activities occur in a particular area;
   –The dates when construction activities cease in an area, temporarily or permanently; and
   –The dates when an area is stabilized, temporarily or permanently; and
   –The dates when any maintenance/replacement or removal of required BMP's.

7. Construction sites are dynamic in nature. The site operator is required to maintain full compliance with the general construction permit, as issued by ADEQ, to maintain an effective SWPPP. As such, this plan must be updated to accurately reflect site features and operations which may become evident during construction, and/or during or after rainfall events. The plan must also be amended if it is determined by the Design Engineer, or the City Engineer as not effective at minimizing pollutant discharges from the site.

8. Contractor shall hydro–seed all exposed slopes immediately after grading operations are completed, unless otherwise noted. All erosion control structures shall remain in place until exposed slopes have been permanently stabilized. Contractor shall be responsible for watering and maintaining hydro–seed until stabilized. Any deviation shall be approved by the engineer.

9. Contractor shall protect all permanent and existing storm water facilities from sediment/silt during construction.

10. Silt fencing and sediment control shall be used at the toe of any erodible slope, following contours of slope (do not install silt fence across any drainage course).

11. Once the construction activities have been completed and the site has met the final stabilization requirements of the permit, the authorized site representative may file a notice or termination (NOT) with ADEQ, with a copy submitted to the City of Prescott Engineering Division to terminate coverage under the permit.

EROSION CONTROL PLAN GENERAL NOTES

1. A standby crew for emergency work shall be available at all times during the rainy season. Necessary materials shall be available on site and stockpiled at convenient locations to facilitate rapid construction of temporary devices or to repair any damaged erosion control measures, especially when rain is imminent.
2. Devices shall not be moved or modified without the approval of the city inspector.
3. All protective devices shown shall be in place at the end of each day.
4. After a rainstorm, all silt and debris shall be removed from check berms and desilting basins. Any graded slope surface protection measure damaged during a rainstorm shall be immediately repaired.
5. Fill slopes at the construction site perimeter must drain away from the tops of the slopes at the end of each day.
6. A copy of the projects storm water pollution prevention plan (SWPPP) shall be maintained at the construction site and always available for review.
7. Protect all storm drainage structures from sediment clogging by providing inlet protection at all openings.
8. Avoid paving during wet weather.
9. Store materials away from drainage courses to prevent contact with storm water.
10. Place drip pans or absorbent materials under construction equipment when not in use.
11. Clean up spills with absorbent materials and dispose of properly.
12. Old asphalt must be disposed of properly. Collect and remove all broken asphalt from the site.
13. Keep work site clean and orderly daily.
14. Properly store paints and solvents.
15. Permanently mark storm drain structures in a manner approved by the construction inspector to minimize inadvertent disposal of residual paints, solvents, or any other pollutant.
16. Allow material delivery and storage only in designated areas and avoid transport near drainage paths and waterways.
17. Minimize the use of hazardous materials on site.
18. Clean up leaks and spills immediately.
19. Use watertight dumpsters for trash and construction waste.
20. Collect site trash as needed, especially during rainy or windy conditions.
21. Arrange for regular waste collection before containers overflow.
22. Do not allow brushes or paint containers to be cleaned out in the dirt, street, gutter, or storm drains.
23. Store and cover dry and wet materials from concrete placement away from drainage areas.
24. Perform washout of concrete trucks in designated areas only. Designated concrete washout area and activities shall conform to requirements of AAC R18–9–B301.I.A.1.12. Washout areas shall be located 50 feet minimum away from storm drains, open ditches, or streets.
25. Temporary sanitary facilities shall be maintained in good working order by a licensed service.
26. Contractor shall be responsible for updating this plan throughout construction and indicate any and all revisions/updates on this plan.
27. Contractor shall conduct his operations in such a manner that storm water will be contained within the project or channeled into the storm drain system provided that it is free from pollutants and debris.
28. City approval of plans does not relieve the developer from correcting errors or omissions discovered during construction. Conformance with the requirements of this plan shall in no way relieve the developer from his responsibilities to the site and adjacent properties. Temporary erosion control shall consist of, but not be limited to, constructing such facilities and taking such measures as are necessary to prevent, control and abate water, mud and erosion damage to public and private property as a result of the construction of this property.
29. Clearing and grubbing should be limited to areas that will receive immediate grading. Erosion control measures will be required to protect areas which have been cleared and grubbed. These measures may include but shall not be limited to: graded ditches, sand or gravel bags, barriers and silt fencing. Care shall be exercised to preserve vegetation beyond limits of grading and prevent sediment discharge while construction in the area is active.
30. Sediment control shall be used at the toe of any erodible slope.
31. Contractor shall immediately restore any damaged erosion control measure within the project boundary.
32. Faces of finished cut and fill slopes shall be prepared and maintained to control against erosion. These permanent control measures may consist of adequate seeding, planting and jute matting. The protection for the slopes shall be installed as soon as practicable and prior to calling for final approval.
33. After a rainstorm, all silt and debris shall be removed from streets, check berms and basins.
34. Contractor/sub–contractor training in sediment and erosion control in accordance with AZPDES.
35. The permittee and contractor shall be responsible, and take necessary precautions, to prevent public trespass onto areas where impounded water creates a hazardous condition.
36. All temporary BMP measures are to be removed after all areas of disturbance have been stabilized and prior to public works final acceptance.
37. The contractor shall properly contain, recover and dispose of all concrete cutting wastes (wet and dry) to protect drainage systems.

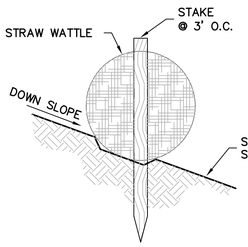

NOTES:
1. Temporary straw wattles shall be installed prior to any grading work in the area to be protected. They shall be maintained throughout the construction period and removed in conjunction with the final grading and site stabilization.

2. Anchors shall be rebar, steel pickets or 2" x 2" stakes, and shall be long enough to extend at least 1.5 to 2.0 feet into the ground when the top is flush.

(SW) STRAW WATTLE BARRIER
N.T.S

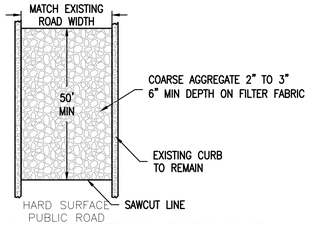

STABILIZED CONSTRUCTION ENTRANCE
N.T.S

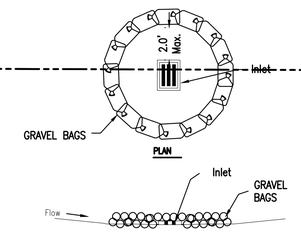

NOTES:
1. The immediate land area around the inlet should be relatively flat (less than 1% slope) and located so that the accumulated sediment can be easily removed.
2. The inside edge of the gravel bags shall be a maximum of 2 feet from the edge of the inlet.

(GB) GRAVEL BAG INLET PROTECTION
N.T.S

(CD) CREATE SEDIMENTATION BASINS BY CONSTRUCTING ROCK CHECK DAMS PER DRAINAGE DESIGN MANUAL FOR MARICOPA COUNTY EROSION CONTROL BEST MANAGEMENT PRACTICES SPC–4 SPECIFICATIONS AND DETAILS. LOCATE DAM LOW POINT AT EXISTING CHANNEL FLOWLINE LOCATION. LOW POINT TO BE 6" LOWER THAN DAM HEIGHT PER DETAIL. CHECK DAM TO HAVE 1' TOP WIDTH WITH 3H:1V SIDE SLOPES.

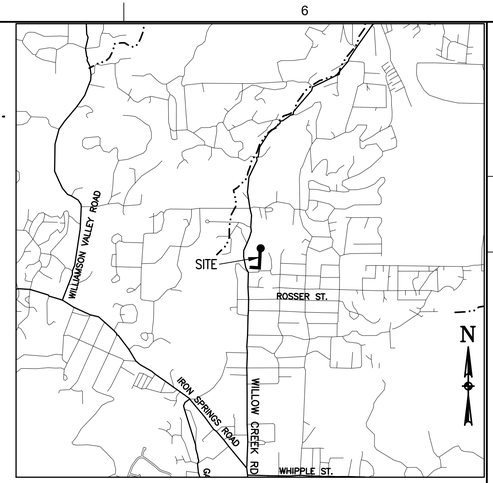

VICINITY MAP
PRESCOTT, AZ N.T.S.

N

60' 30' 0 60' 120'

SCALE:1"=60'

LEGEND
- DISTURBED AREAS OF GRADING
- (SW) FURNISH AND INSTALL STRAW WATTLE PROTECTION ALONG GRADING LIMITS AND AT INTERVALS PER ADOT SPECIFICATIONS PER PLAN DETAIL THIS SHEET.
- (GB) FURNISH AND INSTALL GRAVEL BAG INLET PROTECTION AROUND EXISTING CATCH BASIN INLET. GRAVEL BAG PROTECTION PER PLAN DETAIL THIS SHEET.
- CONSTRUCT 20'x30' TEMPORARY GRAVEL STABILIZED CONSTRUCTION ENTRANCE TO PREVENT TRACKING SOIL ONTO EXISTING PAVEMENT PER DETAIL THIS SHEET.
- CONSTRUCT 20'x30' TEMPORARY CONCRETE WASH OUT AREA WITH 6" MIN DEPRESSION TO PREVENT WASH OUT WATER FROM LEAVING THE SITE. WASH OUT AREA TO COMPLY WITH AAC R18–9–B301.I.A.1.12.
- FURNISH AND PLACE STONE RIP RAP ON FILTER FABRIC, 12" THICK, d_{50}=6" PER PLAN.
- CONTRACTOR SHALL HYDRO–SEED ALL EXPOSED SLOPES EMPLOYING BEST MANAGEMENT PRACTICES AND/OR RECOMMENDED SOIL PREPARATION TO PROMOTE AND SUSTAIN GROWTH. ALL EROSION CONTROL STRUCTURES (IE STRAW WATTLES) SHALL REMAIN IN PLACE UNTIL EXPOSED SLOPES HAVE BEEN PERMANENTLY STABILIZED. CONTRACTOR SHALL BE RESPONSIBLE FOR WATERING AND MAINTAINING HYDRO–SEED UNTIL STABILIZED. ANY DEVIATION SHALL BE APPROVED BY THE ENGINEER.

ALL SITE REVEGETATION SHALL BE COMPLETED WITHIN 90 DAYS OF COMPLETION OF GRADING WORK, OR PRIOR TO RELEASE OF SUBDIVISION GUARANTEE OR ISSUANCE OF CERTIFICATE OF OCCUPANCY, WHICH EVER OCCURS FIRST. PERMANENT BANK/SLOPE STABILIZATION SHALL BE CERTIFIED BY THE PROJECT ENGINEER OR LANDSCAPE ARCHITECT DOCUMENTING THE BANK/SLOPE STABILIZATION WAS COMPLETED ACCORDING TO PLAN PRIOR TO FINAL SUBDIVISION RELEASE OR CERTIFICATE OF OCCUPANCY.

NOTES:
1. THIS PROJECT IS NOT WITHIN 1/4 MILE OF AN IMPAIRED WATERWAY.
2. WETLANDS DO NOT EXIST ON SITE.
3. NO DRY WELLS EXIST ON SITE.
4. ANTICIPATED DISTURBED AREA IS ±1.45 ACRES
5. THE CONTRACTOR SHALL SUBMIT A COPY OF THE APPROVED NOI AND SWPPP TO THE CITY FOR APPROVAL PRIOR TO STARTING WORK.

Brown AND Caldwell

FOR CONSTRUCTION

Registered Professional Engineer (Civil) 22880 GARY R. KELLEY Date signed 8/9/23 ARIZONA, U.S.A.

CITY OF PRESCOTT ARIZONA

ZONE 41 PUMP STATION, TANK AND WATER MAIN

REVISIONS		
REV	DATE	DESCRIPTION

LINE IS 2 INCHES AT FULL SIZE

DESIGNED:	BWT
DRAWN:	BWT
CHECKED:	GRK
CHECKED:	
APPROVED:	

KWE PROJECT NUMBER 18-081

BC PROJECT NUMBER 152624

CLIENT PROJECT NUMBER CIP #17-009

TEMPORARY EROSION CONTROL /SWPP PLAN

DRAWING NUMBER C-007

SHEET NUMBER 14 OF 84

Path: X:\KWE\PROJECTS\2018\18081 ZONE 41 FILENAME: 18081 SWPPP SHEET.DWG PLOT DATE: 8/9/2023 5:18 PM CAD USER: USER

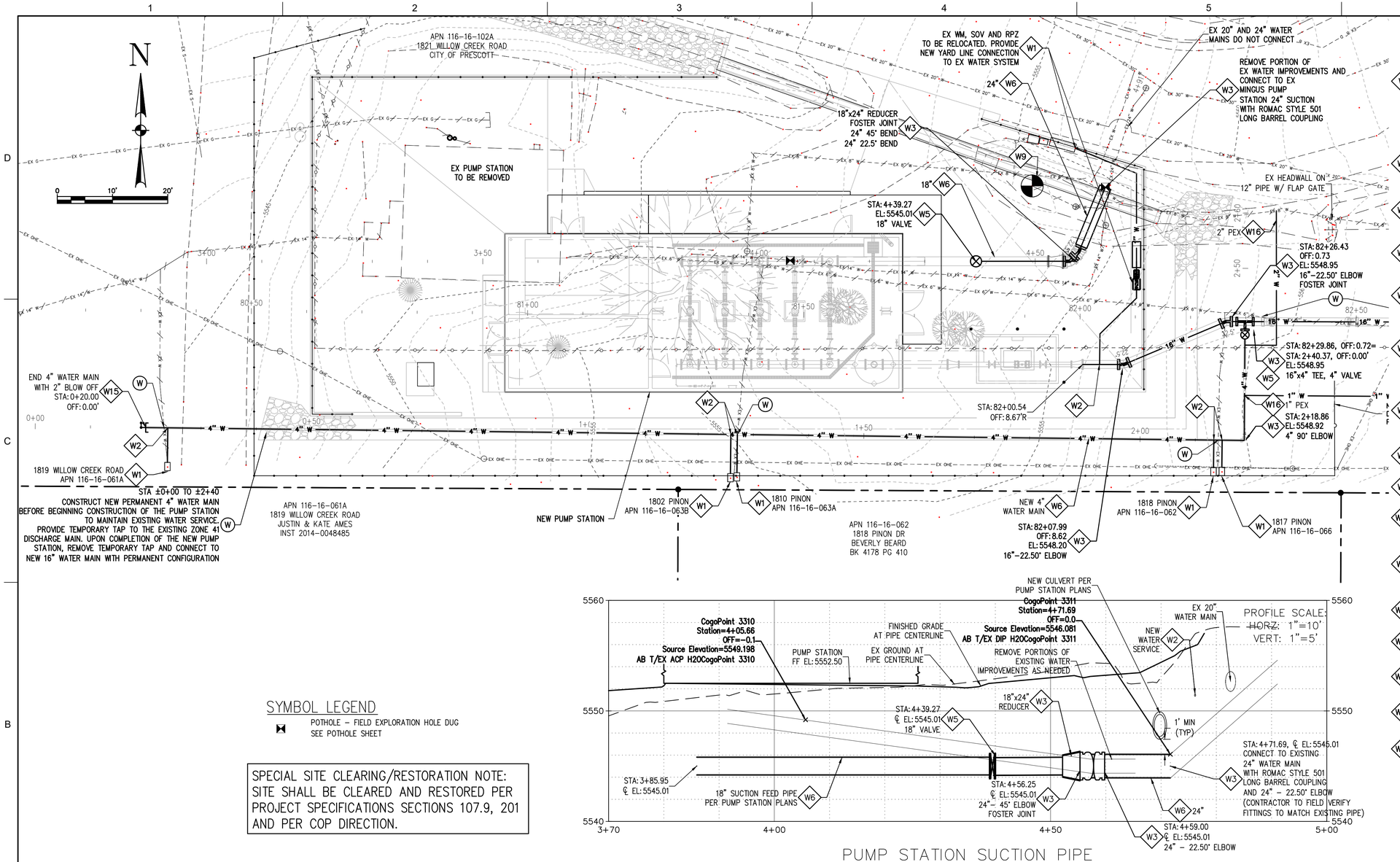

PUMP STATION SUCTION PIPE

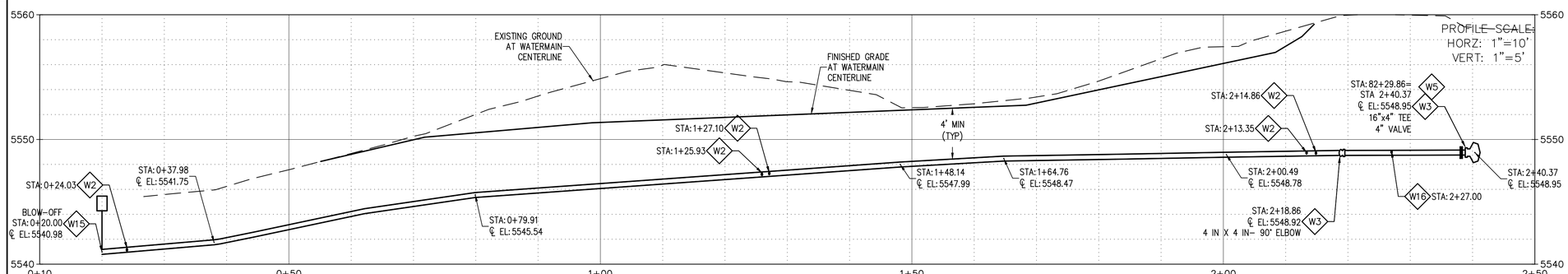

NEW 4-INCH WATER

SYMBOL LEGEND

POTHOLE - FIELD EXPLORATION HOLE DUG
SEE POTHOLE SHEET

SPECIAL SITE CLEARING/RESTORATION NOTE:
SITE SHALL BE CLEARED AND RESTORED PER
PROJECT SPECIFICATIONS SECTIONS 107.9, 201
AND PER COP DIRECTION.

WATER KEY

CONNECT NEW WATER LINE TO EXISTING WATER SERVICE LINE. MATCH APPURTENANCES PER COP SD 316P. MATCH EXISTING WATER SERVICE LINE/METER SIZE. REMOVE EXISTING METER AND BOX. CONTRACTOR TO COORDINATE WATER SERVICE SHUT-DOWN WITH OWNER. CONTRACTOR TO FIELD VERIFY METER AND SERVICE LINE SIZE PRIOR TO CONSTRUCTION (1-INCH MINIMUM). REMOVE AND REPLACE EXISTING LANDSCAPING IN-KIND AS NEEDED.

- W1 — FURNISH AND INSTALL WATER SERVICE CONNECTION ON NEW WATER MAIN PER COP SD 316P WITH NEW SERVICE LINE TO EXISTING METER LOCATION (MATCH EXISTING SERVICE SIZE, 1-INCH MINIMUM).
- W2 — FURNISH AND INSTALL BEND OR FITTING AS NOTED WITH RESTRAINED JOINTS PER QC SD 303Q-1 AND 303Q-2.
- W3 — FURNISH AND INSTALL NEW FIRE HYDRANT ASSEMBLY (COMPLETE INCLUDING TEE AND 6" VALVE AND FIRE HYDRANT) PER QC SD 360Q AND 362Q.
- W4 — FURNISH AND INSTALL WATER VALVE, BOX AND COVER PER QC SD 301Q AND 391Q (SIZE AS NOTED).
- W5 — FURNISH AND INSTALL RESTRAINED JOINT DUCTILE IRON WATER MAIN (SIZE AS NOTED), PRESSURE CLASS 350 PER AWWA C600, WITH TRACER WIRE PER QC SD 319Q-1. WATER MAIN TRENCH PER QC SD 200Q-1.
- W6 — CONNECT TO EXISTING WATER MAIN. FURNISH AND INSTALL TAPPING SLEEVE, VALVE, BOX, AND COVER (SIZE AS NOTED) PER QC SD 340Q. FIELD VERIFY PIPE SIZE, MATERIAL, LOCATION, AND INVERT PRIOR TO CONSTRUCTION.
- W7 — VERTICALLY REALIGN WATER MAIN PER QC SD 370Q (HALF OR FULL AS SHOWN).
- W8 — EXISTING FIRE HYDRANT, PIPING AND GATE VALVE TO BE REMOVED AND SALVAGED TO THE CITY.
- W9 — FURNISH AND INSTALL COMPLETE AIR RELEASE ASSEMBLY PER QC SD 317Q-1.
- W10 — FURNISH AND INSTALL 1-INCH WATER SERVICE CONNECTION WITH 1" WATER METER IN CONCRETE BOX AND COVER PER COP SD 316P WITH CUSTOMER SHUT OFF AND PRESSURE REDUCING VALVES.
- W11 — EXISTING WATER MAIN TO BE REMOVED PER PROJECT SPECIFICATIONS (TYPICAL).
- W12 — SAWCUT AND MATCH EXISTING IMPROVEMENTS IN-KIND.
- W13 — CONNECT TO EXISTING WATER MAIN. FIELD VERIFY PIPE SIZE, MATERIAL, LOCATION AND INVERT PRIOR TO CONSTRUCTION.
- W14 — FURNISH AND INSTALL COMPLETE 2" BLOW OFF ASSEMBLY PER COP SD 318P.
- W15 — FURNISH AND INSTALL TEMPORARY PEX WATER MAIN (SIZE AS NOTED) WITH TEMPORARY CONNECTIONS TO EXISTING WATER SERVICES. AFTER NEW CONSTRUCTION ABANDON WITH FULL CIRCLE CLAMP.
- W16

EXISTING UTILITY CONFLICT REALIGNMENT KEY

- (W) — REALIGN EXISTING WATER UTILITY AS NEEDED TO ACCOMMODATE NEW WATER MAIN. FIELD VERIFY PIPE SIZE, MATERIAL, LOCATION, AND INVERT PRIOR TO CONSTRUCTION. COORDINATE REALIGNMENT WITH UTILITY OWNER AND SERVICES AFFECTED BY REALIGNMENT WORK. PROVIDE 12" MINIMUM SEPARATION FROM WATER MAIN. **REALIGNMENT CONSTRUCTION INCIDENTAL TO WATER MAIN CONSTRUCTION.**
- (G) — EXISTING GAS UTILITY TO BE REALIGNED BY OTHERS AS NEEDED TO ACCOMMODATE NEW WATER MAIN. FIELD VERIFY PIPE SIZE, MATERIAL, LOCATION, AND INVERT PRIOR TO CONSTRUCTION. COORDINATE REALIGNMENT WITH UTILITY OWNER AND SERVICES AFFECTED BY REALIGNMENT WORK. SEPARATION PER COP SD 402P.
- (E) — EXISTING ELECTRIC/CLN/TV UTILITY TO BE REALIGNED BY OTHERS AS NEEDED TO ACCOMMODATE NEW WATER MAIN. FIELD VERIFY PIPE SIZE, MATERIAL, LOCATION, AND INVERT PRIOR TO CONSTRUCTION. COORDINATE REALIGNMENT WITH UTILITY OWNER AND SERVICES AFFECTED BY REALIGNMENT WORK. SEPARATION PER COP SD 402P.
- (S) — CONTRACTOR TO FIELD VERIFY EXISTING SEWER PIPE SIZE, MATERIAL, LOCATION, AND INVERT PRIOR TO CONSTRUCTION. THE EXACT HORIZONTAL AND VERTICAL LOCATION IS UNKNOWN. RECONSTRUCT EXISTING SEWER AS NEEDED TO ACCOMMODATE NEW WATER MAIN. COORDINATE RECONSTRUCTION WITH SERVICES AFFECTED BY RECONSTRUCTION WORK. SEPARATION PER COP SD 402P.

Brown AND Caldwell

FOR CONSTRUCTION

Registered Professional Engineer (Civil) — 22880 — GARY R. KELLEY — Date signed 10/17/23 — ARIZONA, U.S.A.

CITY OF PRESCOTT ARIZONA

ZONE 41 PUMP STATION, TANK AND WATER MAIN

REVISIONS

REV	DATE	DESCRIPTION

LINE IS 2 INCHES AT FULL SIZE

DESIGNED:	BWT
DRAWN:	BWT
CHECKED:	GRK
CHECKED:	
APPROVED:	
KWE PROJECT NUMBER	18-081
BC PROJECT NUMBER	152624
CLIENT PROJECT NUMBER	CIP #17-009

PLAN - PROFILE WATER MAIN PUMP STATION SUCTION PIPE & NEW 4-INCH WATER

DRAWING NUMBER

C-100

SHEET NUMBER 15 OF 84

Path: X:\KWE\PROJECTS\2018\18081 ZONE 41 FILENAME: 18-081 DOUGLAS WATER PP.DWG PLOT DATE: 8/9/2023 5:19 PM CAD USER: USER

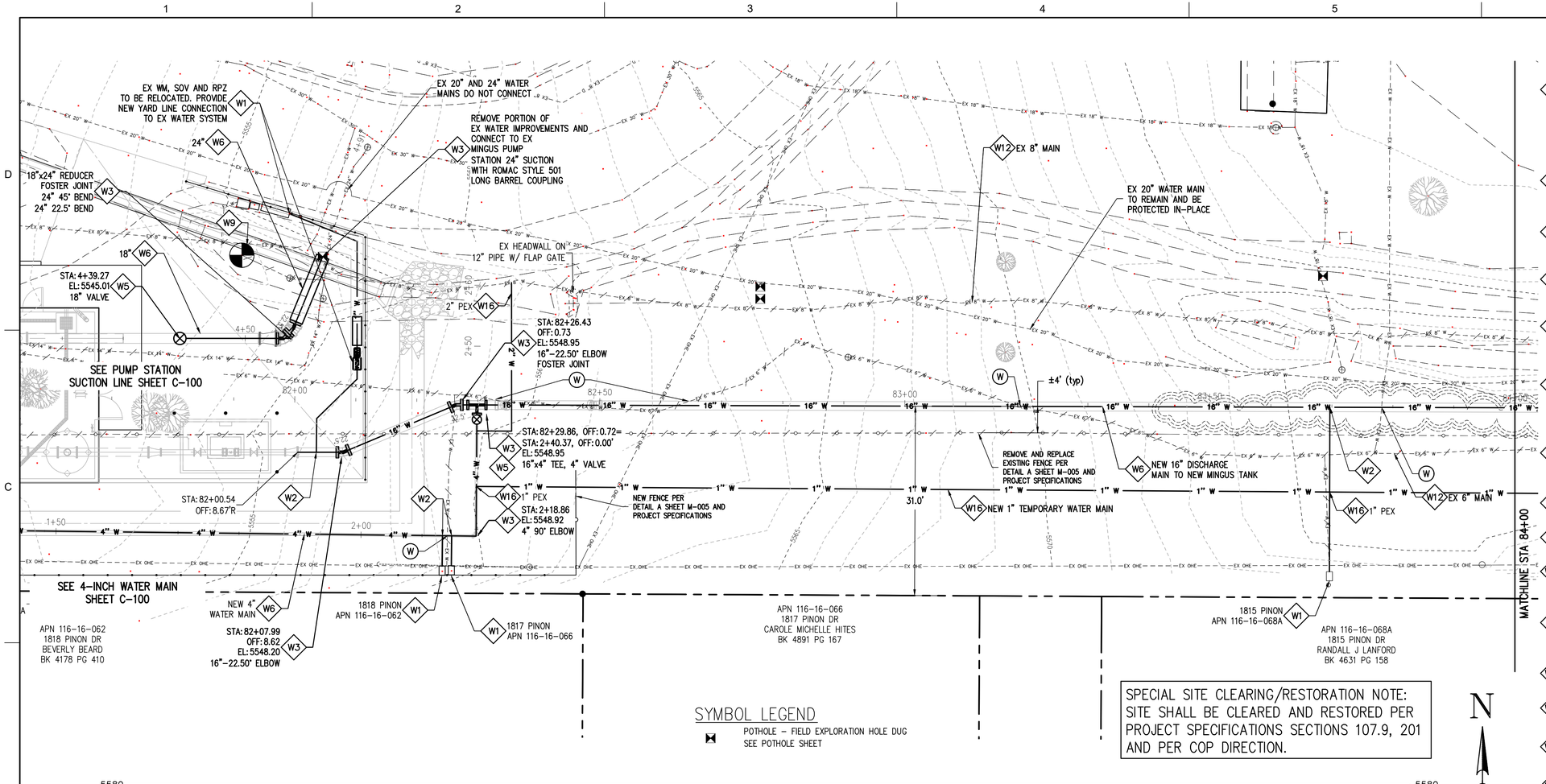

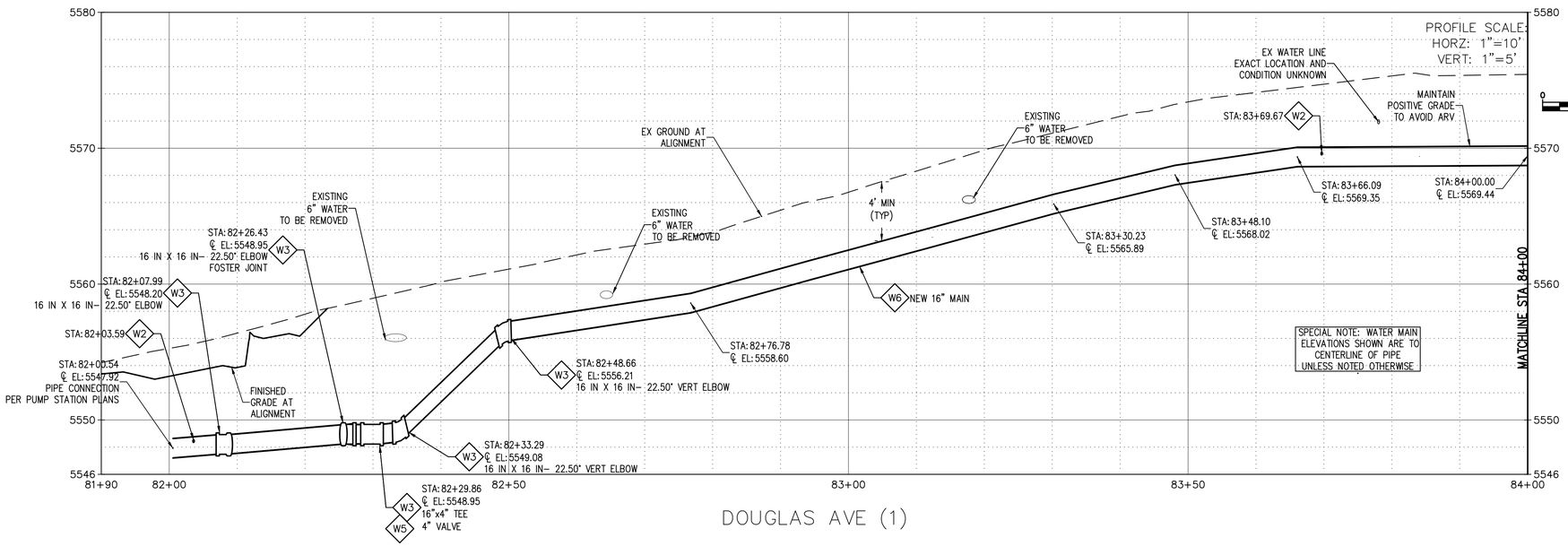

DOUGLAS AVE (1)

WATER KEY

CONNECT NEW WATER LINE TO EXISTING WATER SERVICE LINE. MATCH APPURTENANCES PER COP SD 316P. MATCH EXISTING WATER SERVICE LINE/METER SIZE. REMOVE EXISTING METER AND BOX. CONTRACTOR TO COORDINATE WATER SERVICE SHUT-DOWN WITH OWNER. CONTRACTOR TO FIELD VERIFY METER AND SERVICE LINE SIZE PRIOR TO CONSTRUCTION (1-INCH MINIMUM). REMOVE AND REPLACE EXISTING LANDSCAPING IN-KIND AS NEEDED.

- W1 CONNECT NEW WATER LINE TO EXISTING WATER SERVICE LINE. MATCH APPURTENANCES PER COP SD 316P. MATCH EXISTING WATER SERVICE LINE/METER SIZE. REMOVE EXISTING METER AND BOX. CONTRACTOR TO COORDINATE WATER SERVICE SHUT-DOWN WITH OWNER. CONTRACTOR TO FIELD VERIFY METER AND SERVICE LINE SIZE PRIOR TO CONSTRUCTION (1-INCH MINIMUM). REMOVE AND REPLACE EXISTING LANDSCAPING IN-KIND AS NEEDED.
- W2 FURNISH AND INSTALL WATER SERVICE CONNECTION ON NEW WATER MAIN PER COP SD 316P WITH NEW SERVICE LINE TO EXISTING METER LOCATION (MATCH EXISTING SERVICE SIZE, 1-INCH MINIMUM).
- W3 FURNISH AND INSTALL BEND OR FITTING AS NOTED WITH RESTRAINED JOINTS PER QC SD 303Q-1 AND 303Q-2.
- W4 FURNISH AND INSTALL NEW FIRE HYDRANT ASSEMBLY (COMPLETE INCLUDING TEE AND 6" VALVE AND FIRE HYDRANT) PER QC SD 360Q AND 362Q.
- W5 FURNISH AND INSTALL WATER VALVE, BOX AND COVER PER QC SD 301Q AND 391Q (SIZE AS NOTED).
- W6 FURNISH AND INSTALL RESTRAINED JOINT DUCTILE IRON WATER MAIN (SIZE AS NOTED), PRESSURE CLASS 350 PER AWWA C600, WITH TRACER WIRE PER QC SD 319Q-1. WATER MAIN TRENCH PER QC SD 200Q-1.
- W7 CONNECT TO EXISTING WATER MAIN. FURNISH AND INSTALL TAPPING SLEEVE, VALVE, BOX, AND COVER (SIZE AS NOTED) PER QC SD 340Q. FIELD VERIFY PIPE SIZE, MATERIAL, LOCATION, AND INVERT PRIOR TO CONSTRUCTION.
- W8 VERTICALLY REALIGN WATER MAIN PER QC SD 370Q (HALF OR FULL AS SHOWN).
- W9 EXISTING FIRE HYDRANT, PIPING AND GATE VALVE TO BE REMOVED AND SALVAGED TO THE CITY.
- W10 FURNISH AND INSTALL COMPLETE AIR RELEASE ASSEMBLY PER QC SD 317Q-1.
- W11 FURNISH AND INSTALL 1-INCH WATER SERVICE CONNECTION WITH 1" WATER METER IN CONCRETE BOX AND COVER PER COP SD 316P WITH CUSTOMER SHUT OFF AND PRESSURE REDUCING VALVES.
- W12 EXISTING WATER MAIN TO BE REMOVED PER PROJECT SPECIFICATIONS (TYPICAL).
- W13 SAWCUT AND MATCH EXISTING IMPROVEMENTS IN-KIND.
- W14 CONNECT TO EXISTING WATER MAIN. FIELD VERIFY PIPE SIZE, MATERIAL, LOCATION AND INVERT PRIOR TO CONSTRUCTION.
- W15 FURNISH AND INSTALL COMPLETE 2" BLOW OFF ASSEMBLY PER COP SD 318P.
- W16 FURNISH AND INSTALL TEMPORARY PEX WATER MAIN (SIZE AS NOTED) WITH TEMPORARY CONNECTIONS TO EXISTING WATER SERVICES. AFTER NEW CONSTRUCTION ABANDON WITH FULL CIRCLE CLAMP.

EXISTING UTILITY CONFLICT REALIGNMENT KEY

- (W) REALIGN EXISTING WATER UTILITY AS NEEDED TO ACCOMMODATE NEW WATER MAIN. FIELD VERIFY PIPE SIZE, MATERIAL, LOCATION, AND INVERT PRIOR TO CONSTRUCTION. COORDINATE REALIGNMENT WITH UTILITY OWNER AND SERVICES AFFECTED BY REALIGNMENT WORK. PROVIDE 12" MINIMUM SEPARATION FROM WATER MAIN. **REALIGNMENT CONSTRUCTION INCIDENTAL TO WATER MAIN CONSTRUCTION.**
- (G) EXISTING GAS UTILITY TO BE REALIGNED BY OTHERS AS NEEDED TO ACCOMMODATE NEW WATER MAIN. FIELD VERIFY PIPE SIZE, MATERIAL, LOCATION, AND INVERT PRIOR TO CONSTRUCTION. COORDINATE REALIGNMENT WITH UTILITY OWNER AND SERVICES AFFECTED BY REALIGNMENT WORK. SEPARATION PER COP SD 402P.
- (E) EXISTING ELECTRIC/CLN/TV UTILITY TO BE REALIGNED BY OTHERS AS NEEDED TO ACCOMMODATE NEW WATER MAIN. FIELD VERIFY PIPE SIZE, MATERIAL, LOCATION, AND INVERT PRIOR TO CONSTRUCTION. COORDINATE REALIGNMENT WITH UTILITY OWNER AND SERVICES AFFECTED BY REALIGNMENT WORK. SEPARATION PER COP SD 402P.
- (S) CONTRACTOR TO FIELD VERIFY EXISTING SEWER PIPE SIZE, MATERIAL, LOCATION, AND INVERT PRIOR TO CONSTRUCTION. THE EXACT HORIZONTAL AND VERTICAL LOCATION IS UNKNOWN. RECONSTRUCT EXISTING SEWER AS NEEDED TO ACCOMMODATE NEW WATER MAIN. COORDINATE RECONSTRUCTION WITH SERVICES AFFECTED BY RECONSTRUCTION WORK. SEPARATION PER COP SD 402P.

Brown AND Caldwell

FOR CONSTRUCTION

Registered Professional Engineer (Civil) 22880 GARY R. KELLEY Date signed 8/9/23 ARIZONA, U.S.A.

CITY OF PRESCOTT ARIZONA

ZONE 41 PUMP STATION, TANK AND WATER MAIN

REVISIONS

REV	DATE	DESCRIPTION

LINE IS 2 INCHES AT FULL SIZE

DESIGNED:	BWT
DRAWN:	BWT
CHECKED:	GRK
CHECKED:	
APPROVED:	
KWE PROJECT NUMBER	18-081
BC PROJECT NUMBER	152624
CLIENT PROJECT NUMBER	CIP #17-009

PLAN - PROFILE WATER MAIN DOUGLAS AVE BEGIN - STA 84+00

DRAWING NUMBER

C-101

SHEET NUMBER 16 OF 84

Path: X:\KWE\PROJECTS\2018\18081 ZONE 41 FILENAME: 18-081 DOUGLAS WATER PP.DWG PLOT DATE: 8/9/2023 5:20 PM CAD USER: USER

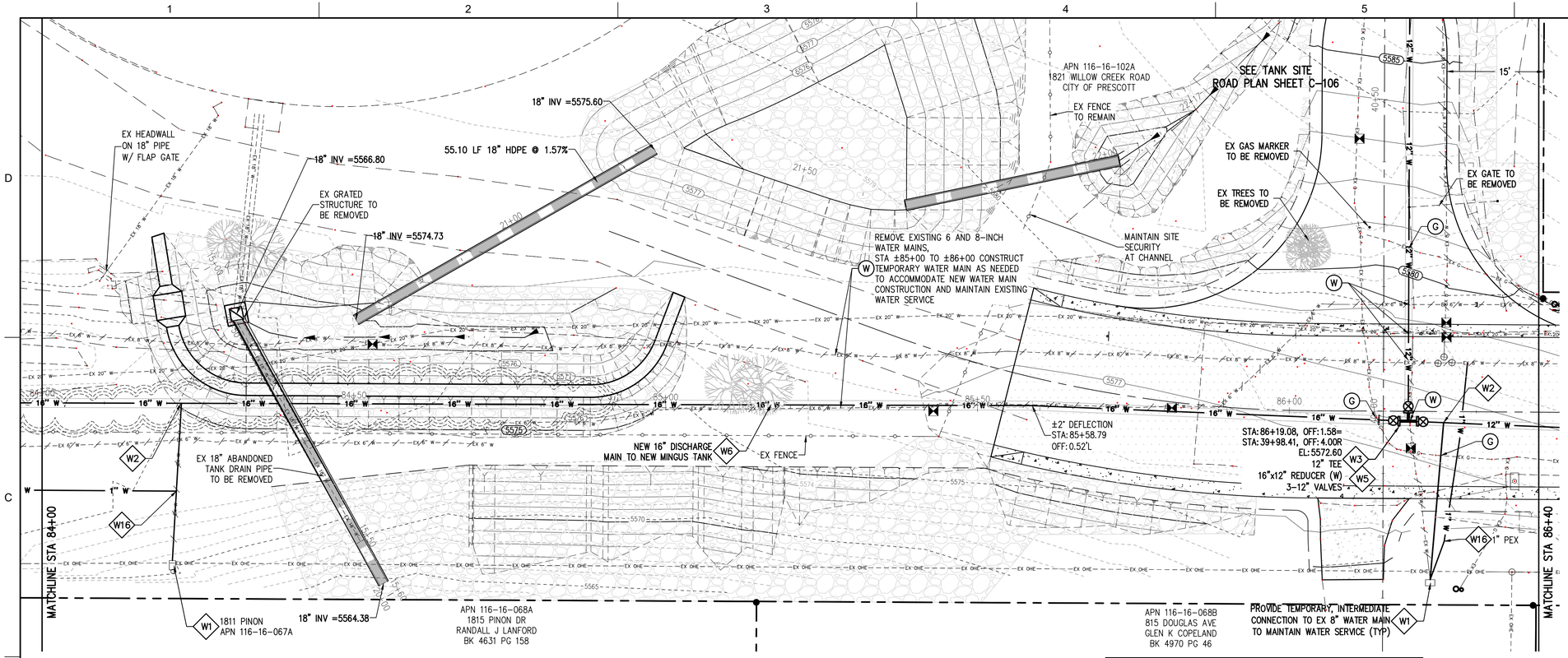

SPECIAL WATER SERVICE NOTE:
THE EXISTING 6" AND 8" WATER MAINS SHALL BE USED TO MAINTAIN EXISTING WATER SERVICES ALONG DOUGLAS AVENUE AND NEAR THE TANK ENTRANCE ROAD; HOWEVER, PORTIONS OF THE 6" WATER MAIN WILL BE CAPPED, ISOLATED, AND TAKEN OUT OF SERVICE TO ACCOMMODATE THE CONSTRUCTION. TEMPORARY WATER SERVICE CONNECTIONS SHALL BE MADE FROM EXISTING WATER SERVICES TO THE EXISTING WATER MAINS AS NEEDED.

SYMBOL LEGEND

POTHOLE – FIELD EXPLORATION HOLE DUG SEE POTHOLE SHEET

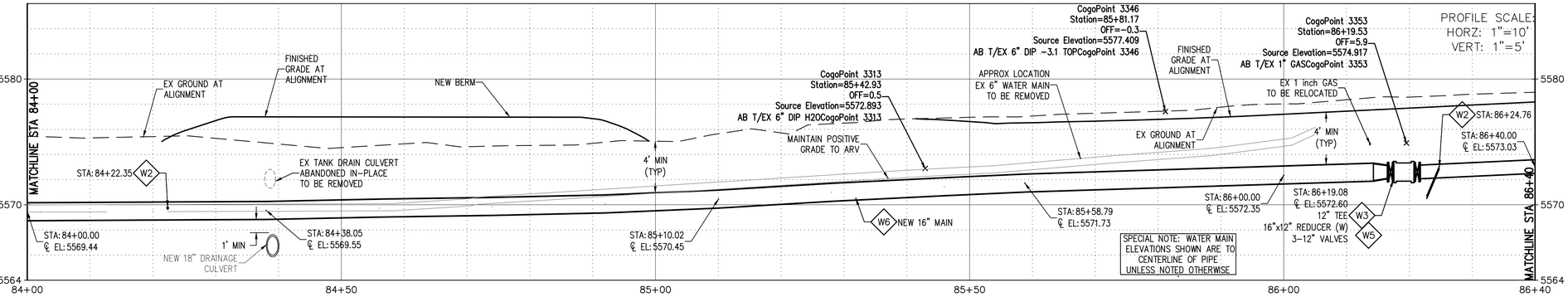

DOUGLAS AVE (2)

WATER KEY

- W1 CONNECT NEW WATER LINE TO EXISTING WATER SERVICE LINE. MATCH APPURTENANCES PER COP SD 316P. MATCH EXISTING WATER SERVICE LINE/METER SIZE. REMOVE EXISTING METER AND BOX. CONTRACTOR TO COORDINATE WATER SERVICE SHUT-DOWN WITH OWNER. CONTRACTOR TO FIELD VERIFY METER AND SERVICE LINE SIZE PRIOR TO CONSTRUCTION (1-INCH MINIMUM). REMOVE AND REPLACE EXISTING LANDSCAPING IN-KIND AS NEEDED.
- W2 FURNISH AND INSTALL WATER SERVICE CONNECTION ON NEW WATER MAIN PER COP SD 316P WITH NEW SERVICE LINE TO EXISTING METER LOCATION (MATCH EXISTING SERVICE SIZE, 1-INCH MINIMUM).
- W3 FURNISH AND INSTALL BEND OR FITTING AS NOTED WITH RESTRAINED JOINTS PER QC SD 303Q-1 AND 303Q-2.
- W4 FURNISH AND INSTALL NEW FIRE HYDRANT ASSEMBLY (COMPLETE INCLUDING TEE AND 6" VALVE AND FIRE HYDRANT) PER QC SD 360Q AND 362Q.
- W5 FURNISH AND INSTALL WATER VALVE, BOX AND COVER PER QC SD 301Q AND 391Q (SIZE AS NOTED).
- W6 FURNISH AND INSTALL RESTRAINED JOINT DUCTILE IRON WATER MAIN (SIZE AS NOTED), PRESSURE CLASS 350 PER AWWA C600, WITH TRACER WIRE PER QC SD 319Q-1. WATER MAIN TRENCH PER QC SD 200Q-1.
- W7 CONNECT TO EXISTING WATER MAIN. FURNISH AND INSTALL TAPPING SLEEVE, VALVE, BOX, AND COVER (SIZE AS NOTED) PER QC SD 340Q. FIELD VERIFY PIPE SIZE, MATERIAL, LOCATION, AND INVERT PRIOR TO CONSTRUCTION.
- W8 VERTICALLY REALIGN WATER MAIN PER QC SD 370Q (HALF OR FULL AS SHOWN).
- W9 EXISTING FIRE HYDRANT, PIPING AND GATE VALVE TO BE REMOVED AND SALVAGED TO THE CITY.
- W10 FURNISH AND INSTALL COMPLETE AIR RELEASE ASSEMBLY PER QC SD 317Q-1.
- W11 FURNISH AND INSTALL 1-INCH WATER SERVICE CONNECTION WITH 1" WATER METER IN CONCRETE BOX AND COVER PER COP SD 316P WITH CUSTOMER SHUT OFF AND PRESSURE REDUCING VALVES.
- W12 EXISTING WATER MAIN TO BE REMOVED PER PROJECT SPECIFICATIONS (TYPICAL).
- W13 SAWCUT AND MATCH EXISTING IMPROVEMENTS IN-KIND.
- W14 CONNECT TO EXISTING WATER MAIN. FIELD VERIFY PIPE SIZE, MATERIAL, LOCATION AND INVERT PRIOR TO CONSTRUCTION.
- W15 FURNISH AND INSTALL COMPLETE 2" BLOW OFF ASSEMBLY PER COP SD 318P.
- W16 FURNISH AND INSTALL TEMPORARY PEX WATER MAIN (SIZE AS NOTED) WITH TEMPORARY CONNECTIONS TO EXISTING WATER SERVICES. AFTER NEW CONSTRUCTION ABANDON WITH FULL CIRCLE CLAMP.

EXISTING UTILITY CONFLICT REALIGNMENT KEY

- (W) REALIGN EXISTING WATER UTILITY AS NEEDED TO ACCOMMODATE NEW WATER MAIN. FIELD VERIFY PIPE SIZE, MATERIAL, LOCATION, AND INVERT PRIOR TO CONSTRUCTION. COORDINATE REALIGNMENT WITH UTILITY OWNER AND SERVICES AFFECTED BY REALIGNMENT WORK. PROVIDE 12" MINIMUM SEPARATION FROM WATER MAIN. **REALIGNMENT CONSTRUCTION INCIDENTAL TO WATER MAIN CONSTRUCTION.**
- (G) EXISTING GAS UTILITY TO BE REALIGNED BY OTHERS AS NEEDED TO ACCOMMODATE NEW WATER MAIN. FIELD VERIFY PIPE SIZE, MATERIAL LOCATION, AND INVERT PRIOR TO CONSTRUCTION. COORDINATE REALIGNMENT WITH UTILITY OWNER AND SERVICES AFFECTED BY REALIGNMENT WORK. SEPARATION PER COP SD 402P.
- (E) EXISTING ELECTRIC/CLN/TV UTILITY TO BE REALIGNED BY OTHERS AS NEEDED TO ACCOMMODATE NEW WATER MAIN. FIELD VERIFY PIPE SIZE, MATERIAL, LOCATION, AND INVERT PRIOR TO CONSTRUCTION. COORDINATE REALIGNMENT WITH UTILITY OWNER AND SERVICES AFFECTED BY REALIGNMENT WORK. SEPARATION PER COP SD 402P.
- (S) CONTRACTOR TO FIELD VERIFY EXISTING SEWER PIPE SIZE, MATERIAL, LOCATION, AND INVERT PRIOR TO CONSTRUCTION. THE EXACT HORIZONTAL AND VERTICAL LOCATION IS UNKNOWN. RECONSTRUCT EXISTING SEWER AS NEEDED TO ACCOMMODATE NEW WATER MAIN. COORDINATE RECONSTRUCTION WITH SERVICES AFFECTED BY RECONSTRUCTION WORK. SEPARATION PER COP SD 402P.

Brown AND Caldwell

FOR CONSTRUCTION

Registered Professional Engineer (Civil) 22880 GARY R. KELLEY Date signed 10/17/23 ARIZONA, U.S.A.

CITY OF PRESCOTT ARIZONA

ZONE 41 PUMP STATION, TANK AND WATER MAIN

REVISIONS		
REV	DATE	DESCRIPTION

LINE IS 2 INCHES AT FULL SIZE

DESIGNED:	BWT
DRAWN:	BWT
CHECKED:	GRK
CHECKED:	
APPROVED:	

KWE PROJECT NUMBER 18-081

BC PROJECT NUMBER 152624

CLIENT PROJECT NUMBER CIP #17-009

PLAN - PROFILE WATER MAIN DOUGLAS AVE STA 84+00 - 86+40

DRAWING NUMBER C-102

SHEET NUMBER 17 OF 84

Path: X:\KWE\PROJECTS\2018\18081 ZONE 41 FILENAME: 18-081 DOUGLAS WATER PP.DWG PLOT DATE: 8/9/2023 5:21 PM CAD USER: USER

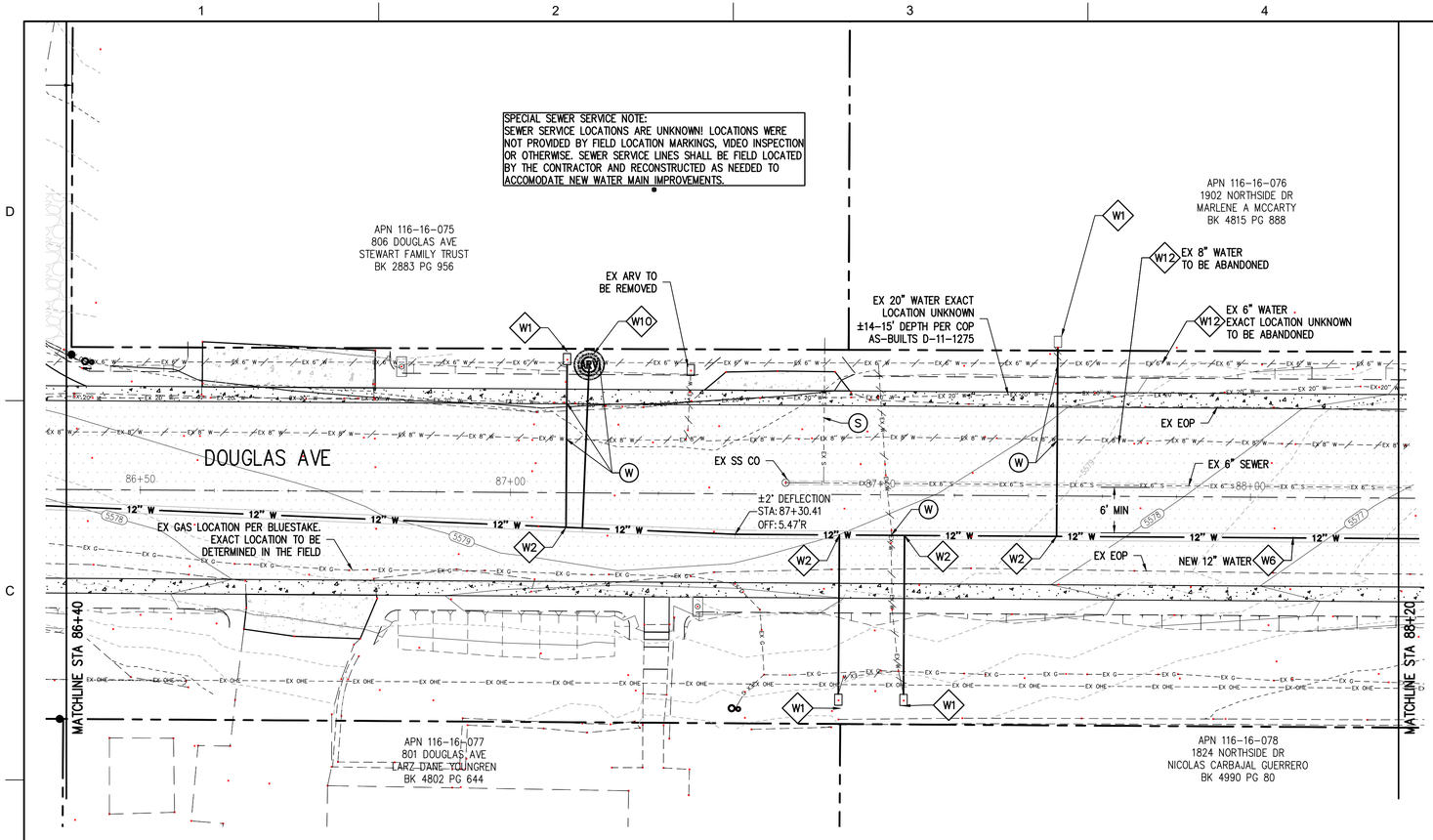

SYMBOL LEGEND

POTHOLE – FIELD EXPLORATION HOLE DUG SEE POTHOLE SHEET

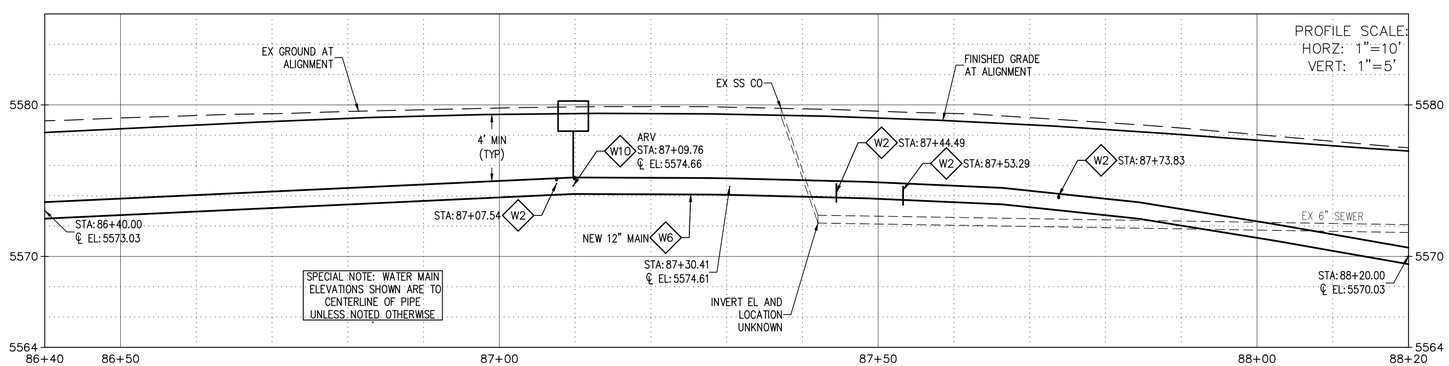

DOUGLAS AVE (3)

SPECIAL WATER SERVICE NOTE:
THE EXISTING 6" AND 8" WATER MAINS SHALL BE USED TO MAINTAIN EXISTING WATER SERVICES ALONG DOUGLAS AVENUE AND NEAR THE TANK ENTRANCE ROAD; HOWEVER, PORTIONS OF THE 6" WATER MAIN WILL BE CAPPED, ISOLATED, AND TAKEN OUT OF SERVICE TO ACCOMMODATE THE CONSTRUCTION. TEMPORARY WATER SERVICE CONNECTIONS SHALL BE MADE FROM EXISTING WATER SERVICES TO THE EXISTING WATER MAINS AS NEEDED.

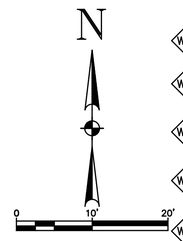

WATER KEY

- W1 — CONNECT NEW WATER LINE TO EXISTING WATER SERVICE LINE. MATCH APPURTENANCES PER COP SD 316P. MATCH EXISTING WATER SERVICE LINE/METER SIZE. REMOVE EXISTING METER AND BOX. CONTRACTOR TO COORDINATE WATER SERVICE SHUT-DOWN WITH OWNER. CONTRACTOR TO FIELD VERIFY METER AND SERVICE LINE SIZE PRIOR TO CONSTRUCTION (1-INCH MINIMUM). REMOVE AND REPLACE EXISTING LANDSCAPING IN-KIND AS NEEDED.
- W2 — FURNISH AND INSTALL WATER SERVICE CONNECTION ON NEW WATER MAIN PER COP SD 316P WITH NEW SERVICE LINE TO EXISTING METER LOCATION (MATCH EXISTING SERVICE SIZE, 1-INCH MINIMUM).
- W3 — FURNISH AND INSTALL BEND OR FITTING AS NOTED WITH RESTRAINED JOINTS PER QC SD 303Q-1 AND 303Q-2.
- W4 — FURNISH AND INSTALL NEW FIRE HYDRANT ASSEMBLY (COMPLETE INCLUDING TEE AND 6" VALVE AND FIRE HYDRANT) PER QC SD 360Q AND 362Q.
- W5 — FURNISH AND INSTALL WATER VALVE, BOX AND COVER PER QC SD 301Q AND 391Q (SIZE AS NOTED).
- W6 — FURNISH AND INSTALL RESTRAINED JOINT DUCTILE IRON WATER MAIN (SIZE AS NOTED), PRESSURE CLASS 350 PER AWWA C600, WITH TRACER WIRE PER QC SD 319Q-1. WATER MAIN TRENCH PER QC SD 200Q-1.
- W7 — CONNECT TO EXISTING WATER MAIN. FURNISH AND INSTALL TAPPING SLEEVE, VALVE, BOX, AND COVER (SIZE AS NOTED) PER QC SD 340Q. FIELD VERIFY PIPE SIZE, MATERIAL, LOCATION, AND INVERT PRIOR TO CONSTRUCTION.
- W8 — VERTICALLY REALIGN WATER MAIN PER QC SD 370Q (HALF OR FULL AS SHOWN).
- W9 — EXISTING FIRE HYDRANT, PIPING AND GATE VALVE TO BE REMOVED AND SALVAGED TO THE CITY.
- W10 — FURNISH AND INSTALL COMPLETE AIR RELEASE ASSEMBLY PER QC SD 317Q-1.
- W11 — FURNISH AND INSTALL 1-INCH WATER SERVICE CONNECTION WITH 1" WATER METER IN CONCRETE BOX AND COVER PER COP SD 316P WITH CUSTOMER SHUT OFF AND PRESSURE REDUCING VALVES.
- W12 — EXISTING WATER MAIN TO BE REMOVED PER PROJECT SPECIFICATIONS (TYPICAL).
- W13 — SAWCUT AND MATCH EXISTING IMPROVEMENTS IN-KIND.
- W14 — CONNECT TO EXISTING WATER MAIN. FIELD VERIFY PIPE SIZE, MATERIAL, LOCATION AND INVERT PRIOR TO CONSTRUCTION.
- W15 — FURNISH AND INSTALL COMPLETE 2" BLOW OFF ASSEMBLY PER COP SD 318P.
- W16 — FURNISH AND INSTALL TEMPORARY PEX WATER MAIN (SIZE AS NOTED) WITH TEMPORARY CONNECTIONS TO EXISTING WATER SERVICES. AFTER NEW CONSTRUCTION ABANDON WITH FULL CIRCLE CLAMP.

EXISTING UTILITY CONFLICT REALIGNMENT KEY

- (W) — REALIGN EXISTING WATER UTILITY AS NEEDED TO ACCOMMODATE NEW WATER MAIN. FIELD VERIFY PIPE SIZE, MATERIAL, LOCATION, AND INVERT PRIOR TO CONSTRUCTION. COORDINATE REALIGNMENT WITH UTILITY OWNER AND SERVICES AFFECTED BY REALIGNMENT WORK. PROVIDE 12" MINIMUM SEPARATION FROM WATER MAIN. **REALIGNMENT CONSTRUCTION INCIDENTAL TO WATER MAIN CONSTRUCTION.**
- (G) — EXISTING GAS UTILITY TO BE REALIGNED BY OTHERS AS NEEDED TO ACCOMMODATE NEW WATER MAIN. FIELD VERIFY PIPE SIZE, MATERIAL LOCATION, AND INVERT PRIOR TO CONSTRUCTION. COORDINATE REALIGNMENT WITH UTILITY OWNER AND SERVICES AFFECTED BY REALIGNMENT WORK. SEPARATION PER COP SD 402P.
- (E) — EXISTING ELECTRIC/CLN/TV UTILITY TO BE REALIGNED BY OTHERS AS NEEDED TO ACCOMMODATE NEW WATER MAIN. FIELD VERIFY PIPE SIZE, MATERIAL, LOCATION, AND INVERT PRIOR TO CONSTRUCTION. COORDINATE REALIGNMENT WITH UTILITY OWNER AND SERVICES AFFECTED BY REALIGNMENT WORK. SEPARATION PER COP SD 402P.
- (S) — CONTRACTOR TO FIELD VERIFY EXISTING SEWER PIPE SIZE, MATERIAL, LOCATION, AND INVERT PRIOR TO CONSTRUCTION. THE EXACT HORIZONTAL AND VERTICAL LOCATION IS UNKNOWN. RECONSTRUCT EXISTING SEWER AS NEEDED TO ACCOMMODATE NEW WATER MAIN. COORDINATE RECONSTRUCTION WITH SERVICES AFFECTED BY RECONSTRUCTION WORK. SEPARATION PER COP SD 402P.

Brown AND Caldwell

FOR CONSTRUCTION

Registered Professional Engineer (Civil) — 22880 — GARY R. KELLEY — Date signed 8/9/23 — ARIZONA, U.S.A.

CITY OF PRESCOTT ARIZONA

ZONE 41 PUMP STATION, TANK AND WATER MAIN

REVISIONS		
REV	DATE	DESCRIPTION

LINE IS 2 INCHES AT FULL SIZE

DESIGNED:	BWT
DRAWN:	BWT
CHECKED:	GRK
CHECKED:	
APPROVED:	
KWE PROJECT NUMBER	18-081
BC PROJECT NUMBER	152624
CLIENT PROJECT NUMBER	CIP #17-009

PLAN - PROFILE WATER MAIN DOUGLAS AVE STA 86+40 - 88+20

DRAWING NUMBER

C-103

SHEET NUMBER 18 OF 84

Path: X:\KWE\PROJECTS\2018\18081 ZONE 41 FILENAME: 18-081 DOUGLAS WATER PP.DWG PLOT DATE: 8/9/2023 5:22 PM CAD USER: USER

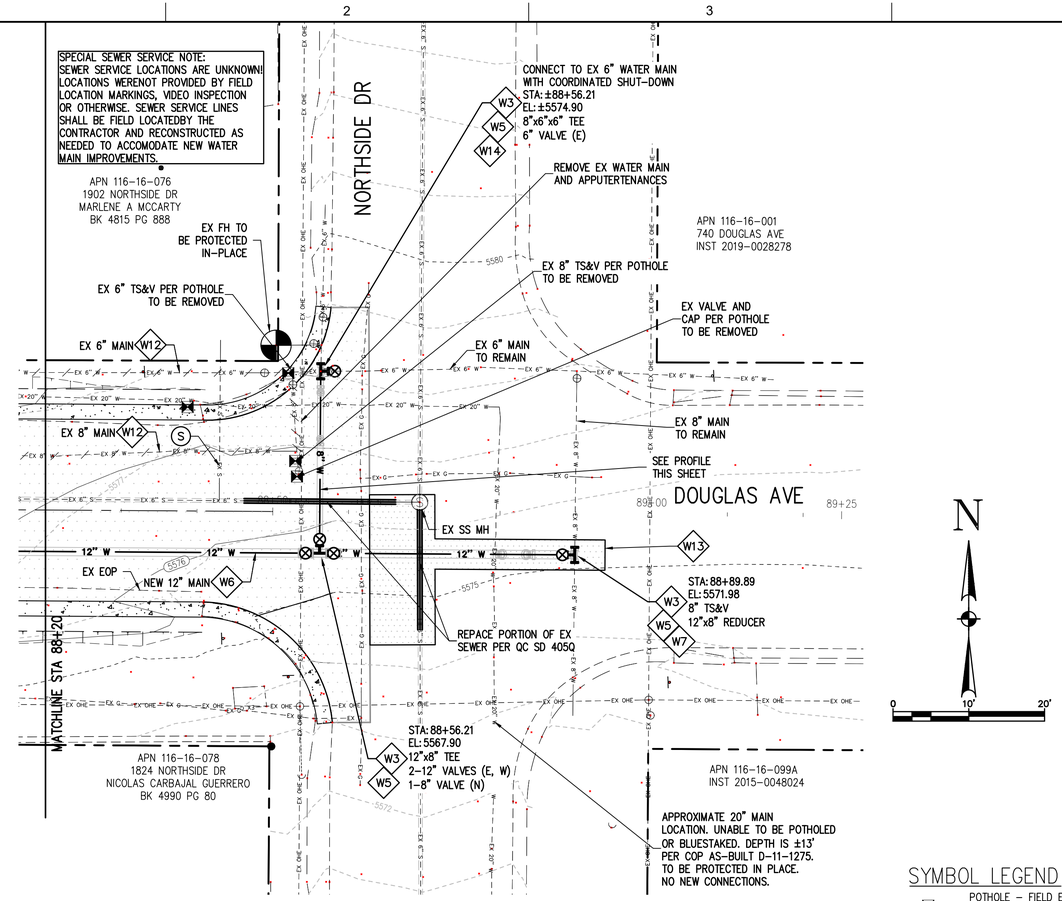

SYMBOL LEGEND

POTHOLE – FIELD EXPLORATION HOLE DUG SEE POTHOLE SHEET

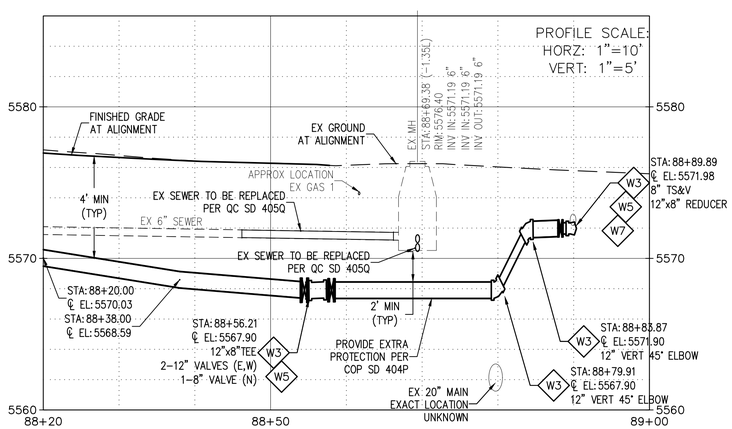

DOUGLAS AVE (4)

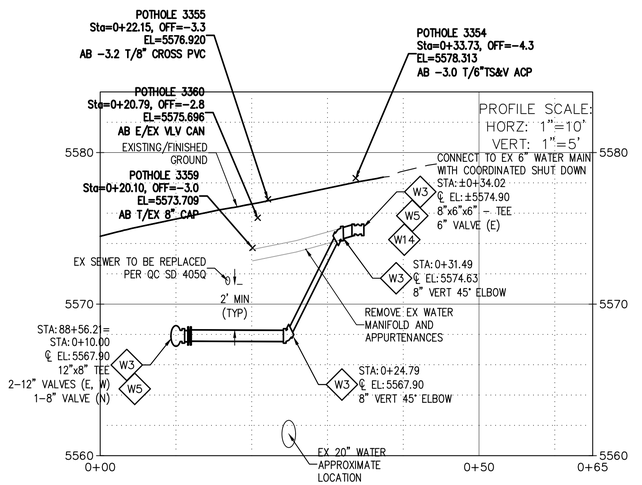

DOUGLAS – NORTHSIDE CONNECTION TO EX WATER

WATER KEY

CONNECT NEW WATER LINE TO EXISTING WATER SERVICE LINE. MATCH APPURTENANCES PER COP SD 316P. MATCH EXISTING WATER SERVICE LINE/METER SIZE. REMOVE EXISTING METER AND BOX. CONTRACTOR TO COORDINATE WATER SERVICE SHUT-DOWN WITH OWNER. CONTRACTOR TO FIELD VERIFY METER AND SERVICE LINE SIZE PRIOR TO CONSTRUCTION (1-INCH MINIMUM). REMOVE AND REPLACE EXISTING LANDSCAPING IN-KIND AS NEEDED.

- W1
- W2 FURNISH AND INSTALL WATER SERVICE CONNECTION ON NEW WATER MAIN PER COP SD 316P WITH NEW SERVICE LINE TO EXISTING METER LOCATION (MATCH EXISTING SERVICE SIZE, 1-INCH MINIMUM).
- W3 FURNISH AND INSTALL BEND OR FITTING AS NOTED WITH RESTRAINED JOINTS PER QC SD 303Q-1 AND 303Q-2.
- W4 FURNISH AND INSTALL NEW FIRE HYDRANT ASSEMBLY (COMPLETE INCLUDING TEE AND 6" VALVE AND FIRE HYDRANT) PER QC SD 360Q AND 362Q.
- W5 FURNISH AND INSTALL WATER VALVE, BOX AND COVER PER QC SD 301Q AND 391Q (SIZE AS NOTED).
- W6 FURNISH AND INSTALL RESTRAINED JOINT DUCTILE IRON WATER MAIN (SIZE AS NOTED), PRESSURE CLASS 350 PER AWWA C600, WITH TRACER WIRE PER QC SD 319Q-1. WATER MAIN TRENCH PER QC SD 200Q-1.
- W7 CONNECT TO EXISTING WATER MAIN. FURNISH AND INSTALL TAPPING SLEEVE, VALVE, BOX, AND COVER (SIZE AS NOTED) PER QC SD 340Q. FIELD VERIFY PIPE SIZE, MATERIAL, LOCATION, AND INVERT PRIOR TO CONSTRUCTION.
- W8 VERTICALLY REALIGN WATER MAIN PER QC SD 370Q (HALF OR FULL AS SHOWN).
- W9 EXISTING FIRE HYDRANT, PIPING AND GATE VALVE TO BE REMOVED AND SALVAGED TO THE CITY.
- W10 FURNISH AND INSTALL COMPLETE AIR RELEASE ASSEMBLY PER QC SD 317Q-1.
- W11 FURNISH AND INSTALL 1-INCH WATER SERVICE CONNECTION WITH 1" WATER METER IN CONCRETE BOX AND COVER PER COP SD 316P WITH CUSTOMER SHUT OFF AND PRESSURE REDUCING VALVES.
- W12 EXISTING WATER MAIN TO BE REMOVED PER PROJECT SPECIFICATIONS (TYPICAL).
- W13 SAWCUT AND MATCH EXISTING IMPROVEMENTS IN-KIND.
- W14 CONNECT TO EXISTING WATER MAIN. FIELD VERIFY PIPE SIZE, MATERIAL, LOCATION AND INVERT PRIOR TO CONSTRUCTION.
- W15 FURNISH AND INSTALL COMPLETE 2" BLOW OFF ASSEMBLY PER COP SD 318P.
- W16 FURNISH AND INSTALL TEMPORARY PEX WATER MAIN (SIZE AS NOTED) WITH TEMPORARY CONNECTIONS TO EXISTING WATER SERVICES. AFTER NEW CONSTRUCTION ABANDON WITH FULL CIRCLE CLAMP.

EXISTING UTILITY CONFLICT REALIGNMENT KEY

- W REALIGN EXISTING WATER UTILITY AS NEEDED TO ACCOMMODATE NEW WATER MAIN. FIELD VERIFY PIPE SIZE, MATERIAL, LOCATION, AND INVERT PRIOR TO CONSTRUCTION. COORDINATE REALIGNMENT WITH UTILITY OWNER AND SERVICES AFFECTED BY REALIGNMENT WORK. PROVIDE 12" MINIMUM SEPARATION FROM WATER MAIN. **REALIGNMENT CONSTRUCTION INCIDENTAL TO WATER MAIN CONSTRUCTION.**
- G EXISTING GAS UTILITY TO BE REALIGNED BY OTHERS AS NEEDED TO ACCOMMODATE NEW WATER MAIN. FIELD VERIFY PIPE SIZE, MATERIAL LOCATION, AND INVERT PRIOR TO CONSTRUCTION. COORDINATE REALIGNMENT WITH UTILITY OWNER AND SERVICES AFFECTED BY REALIGNMENT WORK. SEPARATION PER COP SD 402P.
- E EXISTING ELECTRIC/CLN/TV UTILITY TO BE REALIGNED BY OTHERS AS NEEDED TO ACCOMMODATE NEW WATER MAIN. FIELD VERIFY PIPE SIZE, MATERIAL, LOCATION, AND INVERT PRIOR TO CONSTRUCTION. COORDINATE REALIGNMENT WITH UTILITY OWNER AND SERVICES AFFECTED BY REALIGNMENT WORK. SEPARATION PER COP SD 402P.
- S CONTRACTOR TO FIELD VERIFY EXISTING SEWER PIPE SIZE, MATERIAL, LOCATION, AND INVERT PRIOR TO CONSTRUCTION. THE EXACT HORIZONTAL AND VERTICAL LOCATION IS UNKNOWN. RECONSTRUCT EXISTING SEWER AS NEEDED TO ACCOMMODATE NEW WATER MAIN. COORDINATE RECONSTRUCTION WITH SERVICES AFFECTED BY RECONSTRUCTION WORK. SEPARATION PER COP SD 402P.

Brown AND Caldwell

FOR CONSTRUCTION

Registered Professional Engineer (Civil) 22880 GARY R. KELLEY Date signed 8/9/23 ARIZONA, U.S.A.

CITY OF PRESCOTT ARIZONA

ZONE 41 PUMP STATION, TANK AND WATER MAIN

REVISIONS

REV	DATE	DESCRIPTION

LINE IS 2 INCHES AT FULL SIZE

DESIGNED:	BWT
DRAWN:	BWT
CHECKED:	GRK
CHECKED:	
APPROVED:	

KWE PROJECT NUMBER 18-081

BC PROJECT NUMBER 152624

CLIENT PROJECT NUMBER CIP #17-009

PLAN - PROFILE WATER MAIN DOUGLAS AVE STA 88+20 - END

DRAWING NUMBER

C-104

SHEET NUMBER 19 OF 84

Path: X:\KWE\PROJECTS\2018\18081 ZONE 41 FILENAME: 18-081 DOUGLAS WATER PP.DWG PLOT DATE: 8/9/2023 5:23 PM CAD USER: USER

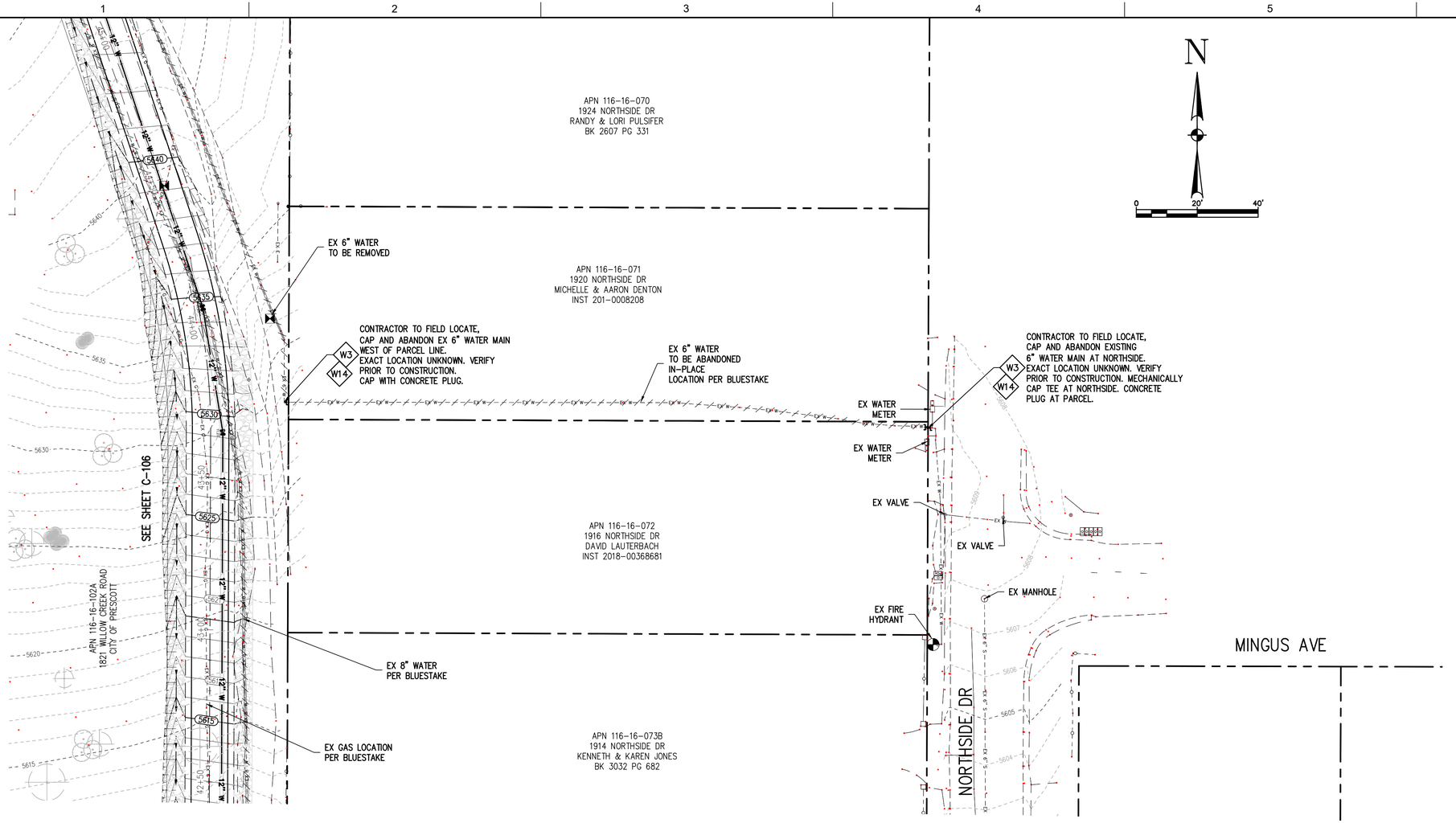

WATER KEY

- W1 — CONNECT NEW WATER LINE TO EXISTING WATER SERVICE LINE. MATCH APPURTENANCES PER COP SD 316P. MATCH EXISTING WATER SERVICE LINE/METER SIZE. REMOVE EXISTING METER AND BOX. CONTRACTOR TO COORDINATE WATER SERVICE SHUT-DOWN WITH OWNER. CONTRACTOR TO FIELD VERIFY METER AND SERVICE LINE SIZE PRIOR TO CONSTRUCTION (1-INCH MINIMUM). REMOVE AND REPLACE EXISTING LANDSCAPING IN-KIND AS NEEDED.
- W2 — FURNISH AND INSTALL WATER SERVICE CONNECTION ON NEW WATER MAIN PER COP SD 316P WITH NEW SERVICE LINE TO EXISTING METER LOCATION (MATCH EXISTING SERVICE SIZE, 1-INCH MINIMUM).
- W3 — FURNISH AND INSTALL BEND OR FITTING AS NOTED WITH RESTRAINED JOINTS PER QC SD 303Q-1 AND 303Q-2.
- W4 — FURNISH AND INSTALL NEW FIRE HYDRANT ASSEMBLY (COMPLETE INCLUDING TEE AND 6" VALVE AND FIRE HYDRANT) PER QC SD 360Q AND 362Q.
- W5 — FURNISH AND INSTALL WATER VALVE, BOX AND COVER PER QC SD 301Q AND 391Q (SIZE AS NOTED).
- W6 — FURNISH AND INSTALL RESTRAINED JOINT DUCTILE IRON WATER MAIN (SIZE AS NOTED), PRESSURE CLASS 350 PER AWWA C600, WITH TRACER WIRE PER QC SD 319Q-1. WATER MAIN TRENCH PER QC SD 200Q-1.
- W7 — CONNECT TO EXISTING WATER MAIN. FURNISH AND INSTALL TAPPING SLEEVE, VALVE, BOX, AND COVER (SIZE AS NOTED) PER QC SD 340Q. FIELD VERIFY PIPE SIZE, MATERIAL, LOCATION, AND INVERT PRIOR TO CONSTRUCTION.
- W8 — VERTICALLY REALIGN WATER MAIN PER QC SD 370Q (HALF OR FULL AS SHOWN).
- W9 — EXISTING FIRE HYDRANT, PIPING AND GATE VALVE TO BE REMOVED AND SALVAGED TO THE CITY.
- W10 — FURNISH AND INSTALL COMPLETE AIR RELEASE ASSEMBLY PER QC SD 317Q-1.
- W11 — FURNISH AND INSTALL 1-INCH WATER SERVICE CONNECTION WITH 1" WATER METER IN CONCRETE BOX AND COVER PER COP SD 316P WITH CUSTOMER SHUT OFF AND PRESSURE REDUCING VALVES.
- W12 — EXISTING WATER MAIN TO BE REMOVED PER PROJECT SPECIFICATIONS (TYPICAL).
- W13 — SAWCUT AND MATCH EXISTING IMPROVEMENTS IN-KIND.
- W14 — CONNECT TO EXISTING WATER MAIN. FIELD VERIFY PIPE SIZE, MATERIAL, LOCATION AND INVERT PRIOR TO CONSTRUCTION.
- W15 — FURNISH AND INSTALL COMPLETE 2" BLOW OFF ASSEMBLY PER COP SD 318P.
- W16 — FURNISH AND INSTALL TEMPORARY PEX WATER MAIN (SIZE AS NOTED) WITH TEMPORARY CONNECTIONS TO EXISTING WATER SERVICES. AFTER NEW CONSTRUCTION ABANDON WITH FULL CIRCLE CLAMP.

SYMBOL LEGEND

- POTHOLE – FIELD EXPLORATION HOLE DUG SEE POTHOLE SHEET

EXISTING UTILITY CONFLICT REALIGNMENT KEY

- (W) — REALIGN EXISTING WATER UTILITY AS NEEDED TO ACCOMMODATE NEW WATER MAIN. FIELD VERIFY PIPE SIZE, MATERIAL, LOCATION, AND INVERT PRIOR TO CONSTRUCTION. COORDINATE REALIGNMENT WITH UTILITY OWNER AND SERVICES AFFECTED BY REALIGNMENT WORK. PROVIDE 12" MINIMUM SEPARATION FROM WATER MAIN. **REALIGNMENT CONSTRUCTION INCIDENTAL TO WATER MAIN CONSTRUCTION.**
- (G) — EXISTING GAS UTILITY TO BE REALIGNED BY OTHERS AS NEEDED TO ACCOMMODATE NEW WATER MAIN. FIELD VERIFY PIPE SIZE, MATERIAL, LOCATION, AND INVERT PRIOR TO CONSTRUCTION. COORDINATE REALIGNMENT WITH UTILITY OWNER AND SERVICES AFFECTED BY REALIGNMENT WORK. SEPARATION PER COP SD 402P.
- (E) — EXISTING ELECTRIC/CLN/TV UTILITY TO BE REALIGNED BY OTHERS AS NEEDED TO ACCOMMODATE NEW WATER MAIN. FIELD VERIFY PIPE SIZE, MATERIAL, LOCATION, AND INVERT PRIOR TO CONSTRUCTION. COORDINATE REALIGNMENT WITH UTILITY OWNER AND SERVICES AFFECTED BY REALIGNMENT WORK. SEPARATION PER COP SD 402P.
- (S) — CONTRACTOR TO FIELD VERIFY EXISTING SEWER PIPE SIZE, MATERIAL, LOCATION, AND INVERT PRIOR TO CONSTRUCTION. THE EXACT HORIZONTAL AND VERTICAL LOCATION IS UNKNOWN. RECONSTRUCT EXISTING SEWER AS NEEDED TO ACCOMMODATE NEW WATER MAIN. COORDINATE RECONSTRUCTION WITH SERVICES AFFECTED BY RECONSTRUCTION WORK. SEPARATION PER COP SD 402P.

Brown AND Caldwell

FOR CONSTRUCTION

Registered Professional Engineer (Civil)
22880
GARY R.
KELLEY
Date signed 8/17/23
ARIZONA, U.S.A.

CITY OF PRESCOTT
ARIZONA

ZONE 41 PUMP STATION, TANK AND WATER MAIN

REVISIONS

REV	DATE	DESCRIPTION

LINE IS 2 INCHES AT FULL SIZE

DESIGNED:	BWT
DRAWN:	BWT
CHECKED:	GRK
CHECKED:	
APPROVED:	

KWE PROJECT NUMBER
18-081

BC PROJECT NUMBER
152624

CLIENT PROJECT NUMBER
CIP #17-009

WATER MAIN PLAN MINGUS AVE WATER MAIN ABANDONMENT

DRAWING NUMBER
C-105

SHEET NUMBER
20 OF 84

Path: X:\KWE\PROJECTS\2018\18081 ZONE 41 FILENAME: 18-081 DOUGLAS WATER PP.DWG PLOT DATE: 8/9/2023 5:23 PM CAD USER: USER

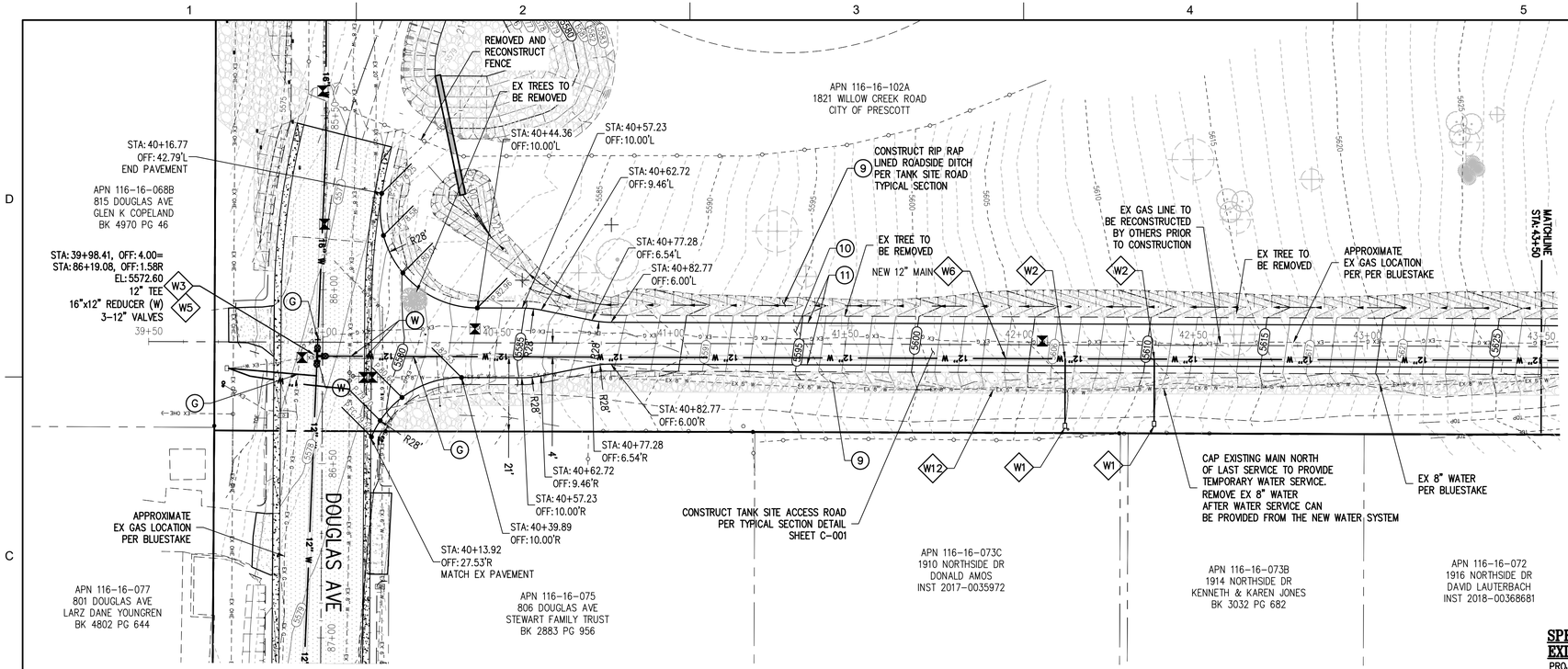

SYMBOL LEGEND

POTHOLE – FIELD EXPLORATION HOLE DUG SEE POTHOLE SHEET

WATER KEY

- W1 CONNECT NEW WATER LINE TO EXISTING WATER SERVICE LINE. MATCH APPURTENANCES PER COP SD 316P. MATCH EXISTING WATER SERVICE LINE/METER SIZE. REMOVE EXISTING METER AND BOX. CONTRACTOR TO COORDINATE WATER SERVICE SHUT-DOWN WITH OWNER. CONTRACTOR TO FIELD VERIFY METER AND SERVICE LINE SIZE PRIOR TO CONSTRUCTION (1-INCH MINIMUM). REMOVE AND REPLACE EXISTING LANDSCAPING IN-KIND AS NEEDED.
- W2 FURNISH AND INSTALL WATER SERVICE CONNECTION ON NEW WATER MAIN PER COP SD 316P WITH NEW SERVICE LINE TO EXISTING METER LOCATION (MATCH EXISTING SERVICE SIZE, 1-INCH MINIMUM).
- W3 FURNISH AND INSTALL BEND OR FITTING AS NOTED WITH RESTRAINED JOINTS PER QC SD 303Q-1 AND 303Q-2.
- W4 FURNISH AND INSTALL NEW FIRE HYDRANT ASSEMBLY (COMPLETE INCLUDING TEE AND 6" VALVE AND FIRE HYDRANT) PER QC SD 360Q AND 362Q.
- W5 FURNISH AND INSTALL WATER VALVE, BOX AND COVER PER QC SD 301Q AND 391Q (SIZE AS NOTED).
- W6 FURNISH AND INSTALL RESTRAINED JOINT DUCTILE IRON WATER MAIN (SIZE AS NOTED), PRESSURE CLASS 350 PER AWWA C600, WITH TRACER WIRE PER QC SD 319Q-1. WATER MAIN TRENCH PER QC SD 200Q-1.
- W7 CONNECT TO EXISTING WATER MAIN. FURNISH AND INSTALL TAPPING SLEEVE, VALVE, BOX, AND COVER (SIZE AS NOTED) PER QC SD 340Q. FIELD VERIFY PIPE SIZE, MATERIAL, LOCATION, AND INVERT PRIOR TO CONSTRUCTION.
- W8 VERTICALLY REALIGN WATER MAIN PER QC SD 370Q (HALF OR FULL AS SHOWN).
- W9 EXISTING FIRE HYDRANT, PIPING AND GATE VALVE TO BE REMOVED AND SALVAGED TO THE CITY.
- W10 FURNISH AND INSTALL COMPLETE AIR RELEASE ASSEMBLY PER QC SD 317Q-1.
- W11 FURNISH AND INSTALL 1-INCH WATER SERVICE CONNECTION WITH 1" WATER METER IN CONCRETE BOX AND COVER PER COP SD 316P WITH CUSTOMER SHUT OFF AND PRESSURE REDUCING VALVES.
- W12 EXISTING WATER MAIN TO BE REMOVED PER PROJECT SPECIFICATIONS (TYPICAL).
- W13 SAWCUT, REMOVE AND REPLACE EXISTING IMPROVEMENTS IN-KIND.
- W14 CONNECT TO EXISTING WATER MAIN. FIELD VERIFY PIPE SIZE, MATERIAL, LOCATION AND INVERT PRIOR TO CONSTRUCTION.

SPECIAL NOTE: TANK SITE ROAD EXISTING GAS MAIN

PROJECT POTHOLE INFORMATION INDICATES THAT THE EXISTING GAS LINE IN THE EXISTING TANK SITE ROADWAY IS 1' OR LESS DEEP. THE EXISTING GAS LINE IS TO BE RECONSTRUCTED BY OTHERS AS NEEDED TO ACCOMMODATE NEW TANK SITE ROADWAY IMPROVEMENTS. FIELD VERIFY PIPE SIZE, MATERIAL, LOCATION, AND INVERT PRIOR TO CONSTRUCTION. COORDINATE REALIGNMENT WITH UTILITY OWNER AND SERVICES AFFECTED BY REALIGNMENT WORK. SEPARATION PER COP SD 402P.

GRADING AND PAVING KEY

- (9) FURNISH AND INSTALL RIP RAP d_{50}=6", 12" THICKNESS ON FILTER FABRIC PER MAG SPECIFICATIONS SECTIONS 703 AND 796.
- (10) CONSTRUCT TANK SITE ACCESS ROAD PER TYPICAL SECTION DETAIL SHEET C-001.
- (11) CONSTRUCT THICKENED EDGE OF ASPHALT PER QC SD 201Q.

EXISTING UTILITY CONFLICT REALIGNMENT KEY

REALIGN EXISTING WATER UTILITY AS NEEDED TO ACCOMMODATE NEW WATER MAIN. FIELD VERIFY PIPE SIZE, MATERIAL, LOCATION, AND INVERT PRIOR TO CONSTRUCTION. COORDINATE REALIGNMENT WITH UTILITY OWNER AND SERVICES AFFECTED BY REALIGNMENT WORK. PROVIDE 12" MINIMUM SEPARATION FROM WATER MAIN. **REALIGNMENT CONSTRUCTION INCIDENTAL TO WATER MAIN CONSTRUCTION.**

- (W) EXISTING GAS UTILITY TO BE REALIGNED BY OTHERS AS NEEDED TO ACCOMMODATE NEW WATER MAIN. FIELD VERIFY PIPE SIZE, MATERIAL, LOCATION, AND INVERT PRIOR TO CONSTRUCTION. COORDINATE REALIGNMENT WITH UTILITY OWNER AND SERVICES AFFECTED BY REALIGNMENT WORK. SEPARATION PER COP SD 402P.
- (G) EXISTING ELECTRIC/CLN/TV UTILITY TO BE REALIGNED BY OTHERS AS NEEDED TO ACCOMMODATE NEW IMPROVEMENTS. FIELD VERIFY PIPE SIZE, MATERIAL, LOCATION, AND INVERT PRIOR TO CONSTRUCTION. COORDINATE REALIGNMENT WITH UTILITY OWNER AND SERVICES AFFECTED BY REALIGNMENT WORK. SEPARATION PER COP SD 402P.
- (E) CONTRACTOR TO FIELD VERIFY EXISTING SEWER PIPE SIZE, MATERIAL, LOCATION, AND INVERT PRIOR TO CONSTRUCTION. THE EXACT HORIZONTAL AND VERTICAL LOCATION IS UNKNOWN. RECONSTRUCT EXISTING SEWER AS NEEDED TO ACCOMMODATE NEW WATER MAIN. COORDINATE RECONSTRUCTION WITH SERVICES AFFECTED BY RECONSTRUCTION WORK. SEPARATION PER COP SD 402P.
- (S)

**SPECIAL POTHOLE NOTE:

EXISTING UTILITY LOCATION INFORMATION SHOWN BASED ON FIELD POTHOLE EXPLORATION/SURVEY.

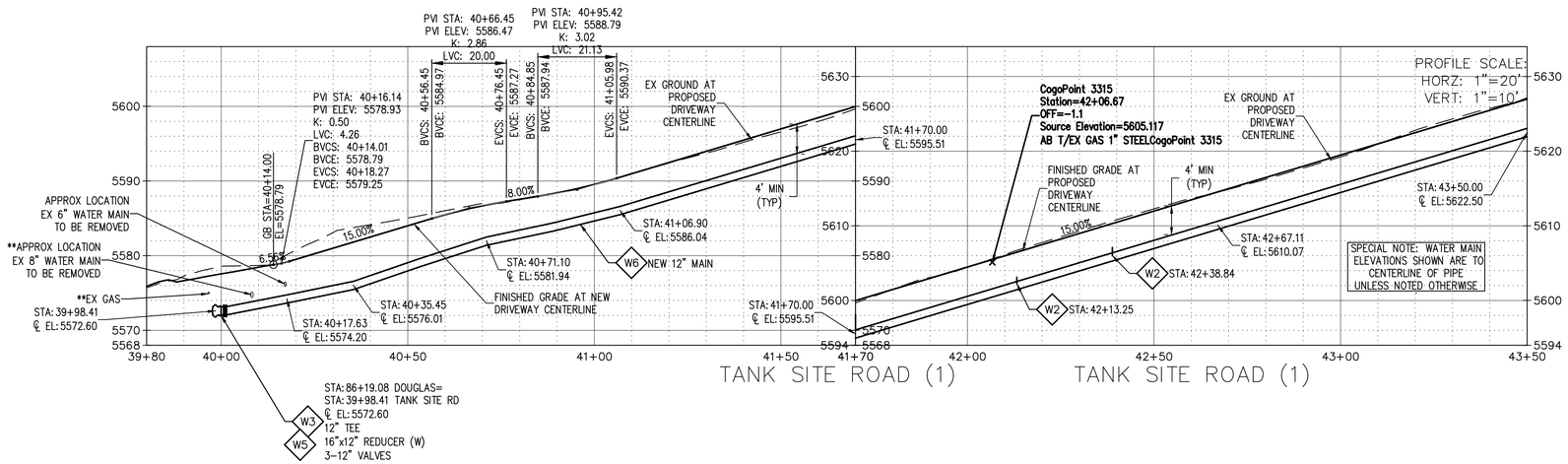

Brown AND Caldwell

FOR CONSTRUCTION

Registered Professional Engineer (Civil) 22880 GARY R. KELLEY Date signed 8/9/23 ARIZONA, U.S.A.

CITY OF PRESCOTT ARIZONA

ZONE 41 PUMP STATION, TANK AND WATER MAIN

REVISIONS		
REV	DATE	DESCRIPTION

LINE IS 2 INCHES AT FULL SIZE

DESIGNED:	BWT
DRAWN:	BWT
CHECKED:	GRK
CHECKED:	
APPROVED:	
KWE PROJECT NUMBER	18-081
BC PROJECT NUMBER	152624
CLIENT PROJECT NUMBER	CIP #17-009

PLAN - PROFILE TANK SITE ROAD AND WATER MAIN BEGIN - STA 43+50

DRAWING NUMBER

C-106

SHEET NUMBER 21 OF 84

Path: X:\KWE\PROJECTS\201818081 ZONE 41 FILENAME: 18-081 TANK SITE WATER PP.DWG PLOT DATE: 8/9/2023 5:25 PM CAD USER: USER

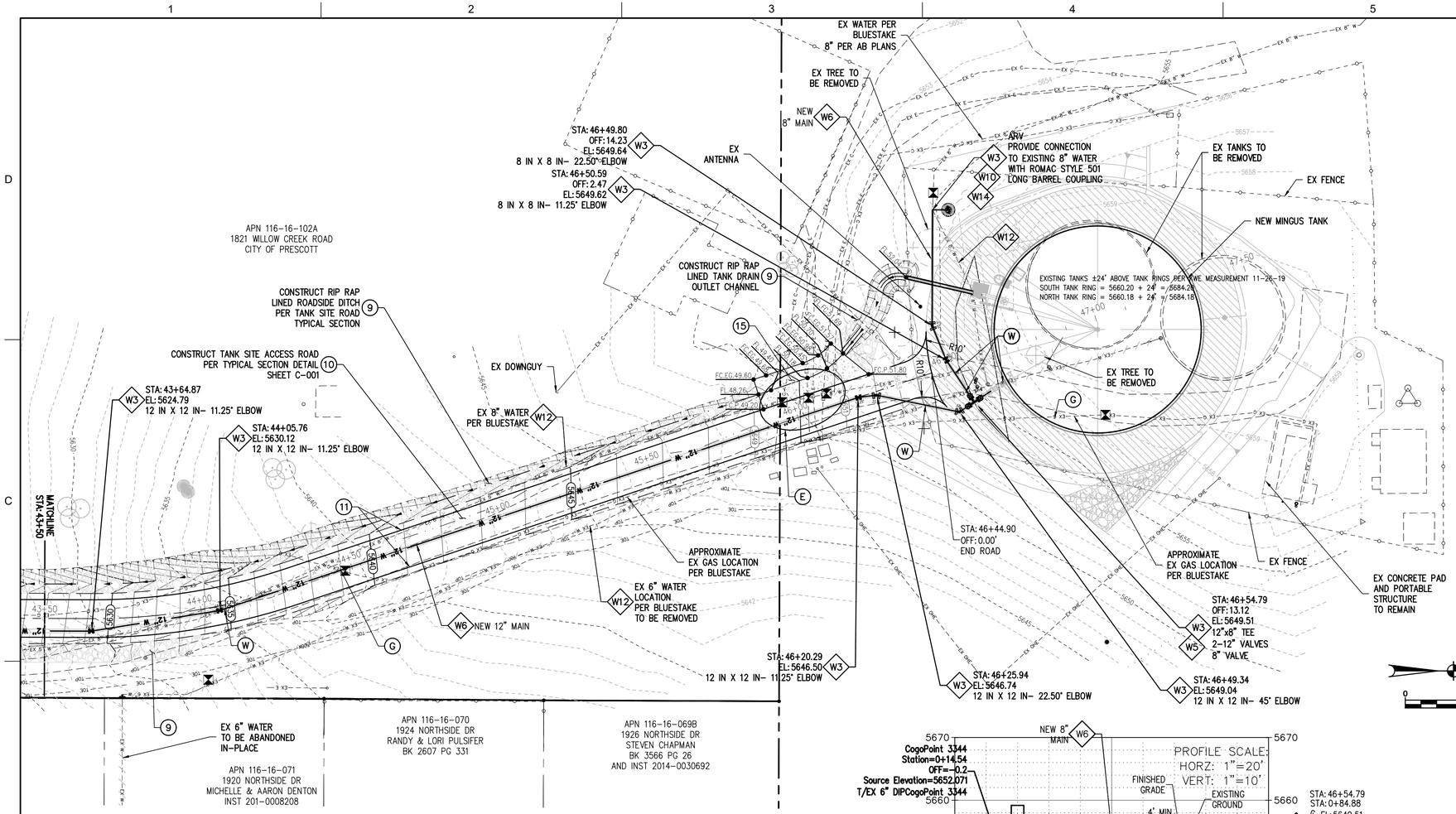

SPECIAL NOTE: TANK SITE ROAD EXISTING GAS MAIN

PROJECT POTHOLE INFORMATION INDICATES THAT THE EXISTING GAS LINE IN THE EXISTING TANK SITE ROADWAY IS 1' OR LESS DEEP. THE EXISTING GAS LINE IS TO BE RECONSTRUCTED BY OTHERS AS NEEDED TO ACCOMMODATE NEW TANK SITE ROADWAY IMPROVEMENTS. FIELD VERIFY PIPE SIZE, MATERIAL, LOCATION, AND INVERT PRIOR TO CONSTRUCTION. COORDINATE REALIGNMENT WITH UTILITY OWNER AND SERVICES AFFECTED BY REALIGNMENT WORK. SEPARATION PER COP SD 402P.

GRADING AND PAVING KEY

9 FURNISH AND INSTALL RIP RAP d_{50}=6", 12" THICKNESS ON FILTER FABRIC PER MAG SPECIFICATIONS SECTIONS 703 AND 796.

10 CONSTRUCT TANK SITE ACCESS ROAD PER TYPICAL SECTION DETAIL SHEET C-001.

11 CONSTRUCT THICKENED EDGE OF ASPHALT PER QC SD 201Q.

15 CONSTRUCT CONCRETE VALLEY GUTTER PER QC SD 240Q–2, MODIFIED TO 10' WIDE AND PER PLAN.

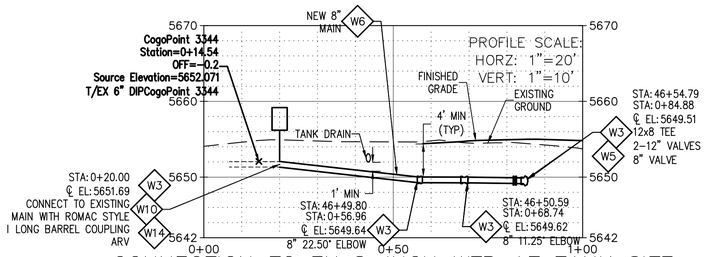

CONNECTION TO EX 8–INCH WTR AT TANK SITE

SYMBOL LEGEND

POTHOLE – FIELD EXPLORATION HOLE DUG SEE POTHOLE SHEET

**SPECIAL POTHOLE NOTE:

EXISTING UTILITY LOCATION INFORMATION SHOWN BASED ON FIELD POTHOLE EXPLORATION/SURVEY.

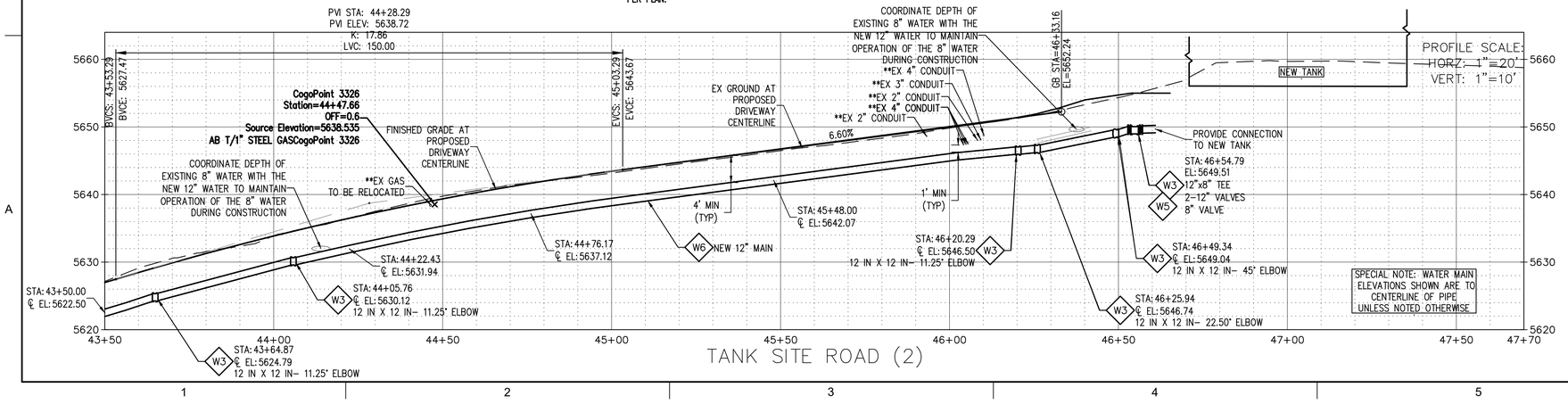

TANK SITE ROAD (2)

WATER KEY

CONNECT NEW WATER LINE TO EXISTING WATER SERVICE LINE. MATCH APPURTENANCES PER COP SD 316P. MATCH EXISTING WATER SERVICE LINE/METER SIZE. REMOVE EXISTING METER AND BOX. CONTRACTOR TO COORDINATE WATER SERVICE SHUT–DOWN WITH OWNER. CONTRACTOR TO FIELD VERIFY METER AND SERVICE LINE SIZE PRIOR TO CONSTRUCTION (1–INCH MINIMUM). REMOVE AND REPLACE EXISTING LANDSCAPING IN–KIND AS NEEDED.

W1

W2 FURNISH AND INSTALL WATER SERVICE CONNECTION ON NEW WATER MAIN PER COP SD 316P WITH NEW SERVICE LINE TO EXISTING METER LOCATION (MATCH EXISTING SERVICE SIZE, 1–INCH MINIMUM).

W3 FURNISH AND INSTALL BEND OR FITTING AS NOTED WITH RESTRAINED JOINTS PER QC SD 303Q–1 AND 303Q–2.

W4 FURNISH AND INSTALL NEW FIRE HYDRANT ASSEMBLY (COMPLETE INCLUDING TEE AND 6" VALVE AND FIRE HYDRANT) PER QC SD 360Q AND 362Q.

W5 FURNISH AND INSTALL WATER VALVE, BOX AND COVER PER QC SD 301Q AND 391Q (SIZE AS NOTED).

W6 FURNISH AND INSTALL RESTRAINED JOINT DUCTILE IRON WATER MAIN (SIZE AS NOTED), PRESSURE CLASS 350 PER AWWA C600, WITH TRACER WIRE PER QC SD 319Q–1. WATER MAIN TRENCH PER QC SD 200Q–1.

W7 CONNECT TO EXISTING WATER MAIN. FURNISH AND INSTALL TAPPING SLEEVE, VALVE, BOX, AND COVER (SIZE AS NOTED) PER QC SD 340Q. FIELD VERIFY PIPE SIZE, MATERIAL, LOCATION, AND INVERT PRIOR TO CONSTRUCTION.

W8 VERTICALLY REALIGN WATER MAIN PER QC SD 370Q (HALF OR FULL AS SHOWN).

W9 EXISTING FIRE HYDRANT, PIPING AND GATE VALVE TO BE REMOVED AND SALVAGED TO THE CITY.

W10 FURNISH AND INSTALL COMPLETE AIR RELEASE ASSEMBLY PER QC SD 317Q–1.

W11 FURNISH AND INSTALL 1–INCH WATER SERVICE CONNECTION WITH 1" WATER METER IN CONCRETE BOX AND COVER PER COP SD 316P WITH CUSTOMER SHUT OFF AND PRESSURE REDUCING VALVES.

W12 EXISTING WATER MAIN TO BE REMOVED PER PROJECT SPECIFICATIONS (TYPICAL).

W13 SAWCUT, REMOVE AND REPLACE EXISTING IMPROVEMENTS IN–KIND.

W14 CONNECT TO EXISTING WATER MAIN. FIELD VERIFY PIPE SIZE, MATERIAL, LOCATION AND INVERT PRIOR TO CONSTRUCTION.

EXISTING UTILITY CONFLICT REALIGNMENT KEY

W REALIGN EXISTING WATER UTILITY AS NEEDED TO ACCOMMODATE NEW WATER MAIN. FIELD VERIFY PIPE SIZE, MATERIAL, LOCATION, AND INVERT PRIOR TO CONSTRUCTION. COORDINATE REALIGNMENT WITH UTILITY OWNER AND SERVICES AFFECTED BY REALIGNMENT WORK. PROVIDE 12" MINIMUM SEPARATION FROM WATER MAIN. **REALIGNMENT CONSTRUCTION INCIDENTAL TO WATER MAIN CONSTRUCTION.**

G EXISTING GAS UTILITY TO BE REALIGNED BY OTHERS AS NEEDED TO ACCOMMODATE NEW WATER MAIN. FIELD VERIFY PIPE SIZE, MATERIAL LOCATION, AND INVERT PRIOR TO CONSTRUCTION. COORDINATE REALIGNMENT WITH UTILITY OWNER AND SERVICES AFFECTED BY REALIGNMENT WORK. SEPARATION PER COP SD 402P.

E EXISTING ELECTRIC/CLN/TV UTILITY TO BE REALIGNED BY OTHERS AS NEEDED TO ACCOMMODATE NEW IMPROVEMENTS. FIELD VERIFY PIPE SIZE, MATERIAL, LOCATION, AND INVERT PRIOR TO CONSTRUCTION. COORDINATE REALIGNMENT WITH UTILITY OWNER AND SERVICES AFFECTED BY REALIGNMENT WORK. SEPARATION PER COP SD 402P.

S CONTRACTOR TO FIELD VERIFY EXISTING SEWER PIPE SIZE, MATERIAL, LOCATION, AND INVERT PRIOR TO CONSTRUCTION. THE EXACT HORIZONTAL AND VERTICAL LOCATION IS UNKNOWN. RECONSTRUCT EXISTING SEWER AS NEEDED TO ACCOMMODATE NEW WATER MAIN. COORDINATE RECONSTRUCTION WITH SERVICES AFFECTED BY RECONSTRUCTION WORK. SEPARATION PER COP SD 402P.

Brown AND Caldwell

FOR CONSTRUCTION

Registered Professional Engineer (Civil) 22880 GARY R. KELLEY Date signed 8/9/23 ARIZONA, U.S.A.

CITY OF PRESCOTT ARIZONA

ZONE 41 PUMP STATION, TANK AND WATER MAIN

REVISIONS		
REV	DATE	DESCRIPTION

LINE IS 2 INCHES AT FULL SIZE

DESIGNED:	BWT
DRAWN:	BWT
CHECKED:	GRK
CHECKED:	
APPROVED:	
KWE PROJECT NUMBER	18-081
BC PROJECT NUMBER	152624
CLIENT PROJECT NUMBER	CIP #17-009

PLAN - PROFILE TANK SITE ROAD AND WATER MAIN STA 43+50 - END

DRAWING NUMBER

C-107

SHEET NUMBER 22 OF 84

Path: X:\KWEPROJECTS\2018\18081 ZONE 41 FILENAME: 18-081 TANK SITE WATER PP.DWG PLOT DATE: 8/9/2023 5:26 PM CAD USER: USER

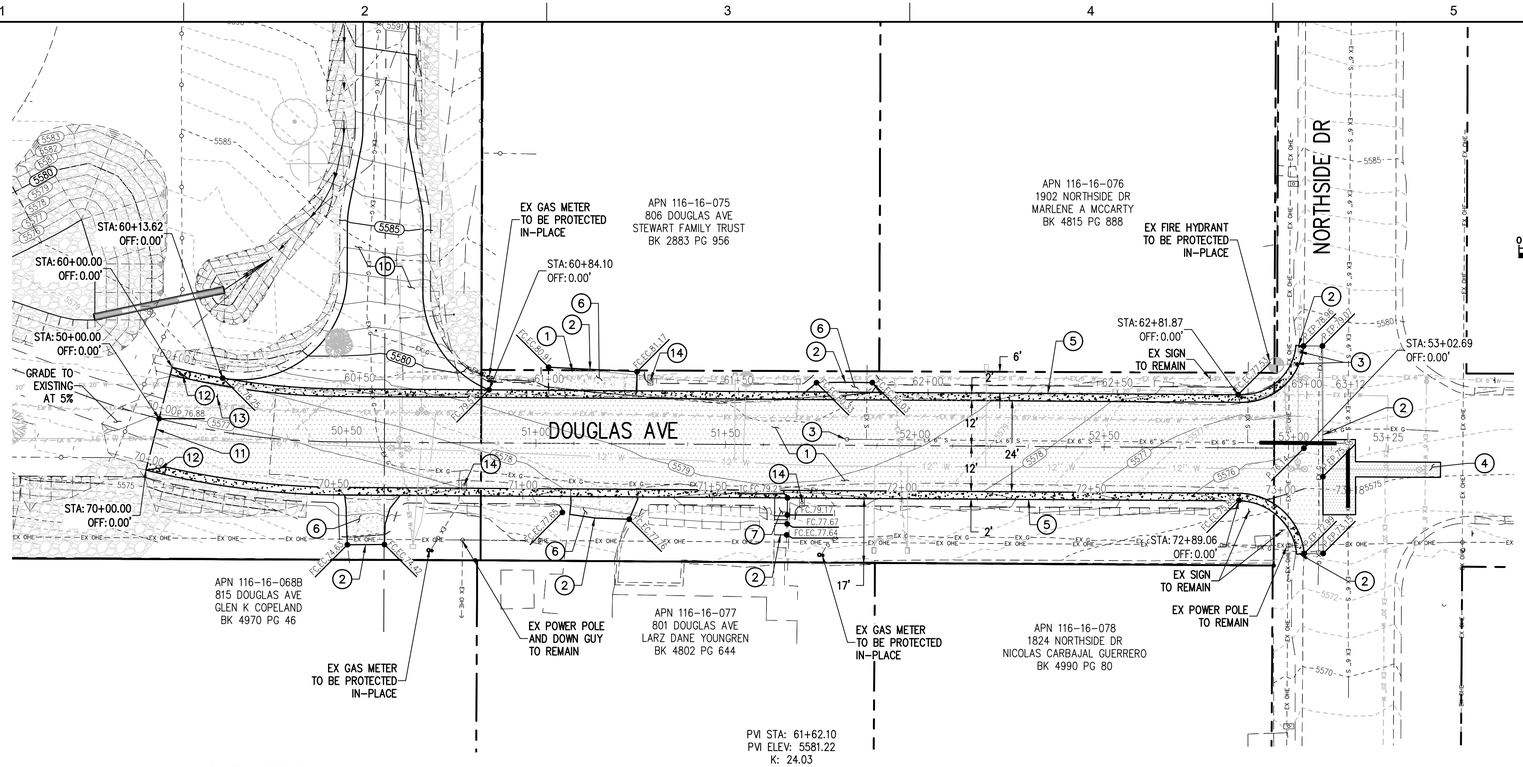

GRADING AND PAVING KEY

1. REMOVE EXISTING PAVEMENT SECTION TO REQUIRED DEPTH. CONSTRUCT NEW STRUCTURAL PAVEMENT SECTION PER PROJECT SPECIFICATIONS AND PROJECT SOILS REPORT.
2. SAWCUT AND MATCH WHERE SHOWN PER PROJECT SPECIFICATIONS.
3. ADJUST UTILITY FRAME, COVER, VALVE BOX, MANHOLE, AND/OR CLEANOUT PER QC SD 270Q, 391Q AND 422Q.
4. SAWCUT, REMOVE AND REPLACE AC PAVEMENT/TRENCH PER QC SD 200Q-1 AND PER PROJECT SPECIFICATIONS.
5. CONSTRUCT NEW ROLL CURB AND GUTTER PER QC SD 220Q-1 (TYPE 'D' ON THE HIGH SIDE, TYPE 'C' ON THE LOW SIDE). PROVIDE DOWELS INTO EXISTING CURB PER PLAN DETAIL.
6. REMOVE EXISTING DRIVEWAY IMPROVEMENTS AS NEEDED TO ACCOMMODATE IMPROVEMENTS. CONSTRUCT NEW CONCRETE DRIVEWAY WITH 6" PC CONCRETE ON 6" ABC PER PROJECT SPECIFICATIONS. MATCH EXISTING DRIVEWAY WIDTH AND CONFIGURATION.
7. CONSTRUCT CONCRETE STEPS AND HANDRAILS PER DETAIL SHEET C-001 AND PER PROJECT SPECIFICATIONS SECTION 340.
8. FURNISH AND INSTALL N-12 HDPE STORM DRAIN PIPE (SIZE AS NOTED) WITH WATER TIGHT FITTINGS PER PROJECT SPECIFICATIONS.
9. FURNISH AND INSTALL RIP RAP d_{50}=6", 12" THICKNESS ON FILTER FABRIC PER MAG SPECIFICATIONS SECTIONS 703 AND 796.
10. CONSTRUCT TANK SITE ACCESS ROAD PER TYPICAL SECTION DETAIL SHEET C-001.
11. CONSTRUCT THICKENED EDGE OF ASPHALT PER QC SD 201Q.
12. CONSTRUCT 5' CURB TRANSITION FROM ROLL CURB AND GUTTER TO FLUSH.
13. RELOCATE EXISTING SIGN. FURNISH AND INSTALL NEW SIGN POST AND BASE PER QC SD 131Q.
14. RELOCATE EXISTING MAILBOX. FURNISH AND INSTALL ADDITIONAL APPURTENANCES AS NEEDED FOR REINSTALLATION PER QC SD 134Q-1. COORDINATE REINSTALLATION WITH OWNER.

Brown AND Caldwell

FOR CONSTRUCTION

Registered Professional Engineer (Civil) 22880 GARY R. KELLEY Date signed 8/9/23 ARIZONA, U.S.A.

CITY OF PRESCOTT ARIZONA

ZONE 41 PUMP STATION, TANK AND WATER MAIN

REVISIONS

REV	DATE	DESCRIPTION

LINE IS 2 INCHES AT FULL SIZE

DESIGNED:	BWT
DRAWN:	BWT
CHECKED:	GRK
CHECKED:	
APPROVED:	

KWE PROJECT NUMBER 18-081

BC PROJECT NUMBER 152624

CLIENT PROJECT NUMBER CIP #17-009

PLAN - PROFILE ROAD CONSTRUCTION DOUGLAS AVE

-

DRAWING NUMBER

C-201

SHEET NUMBER 23 OF 84

Path: X:\KWEPROJECTS\2018\18081 ZONE 41 FILENAME: 18-081 DOUGLAS PAVEMENT PP.DWG PLOT DATE: 8/9/2023 5:27 PM CAD USER: USER

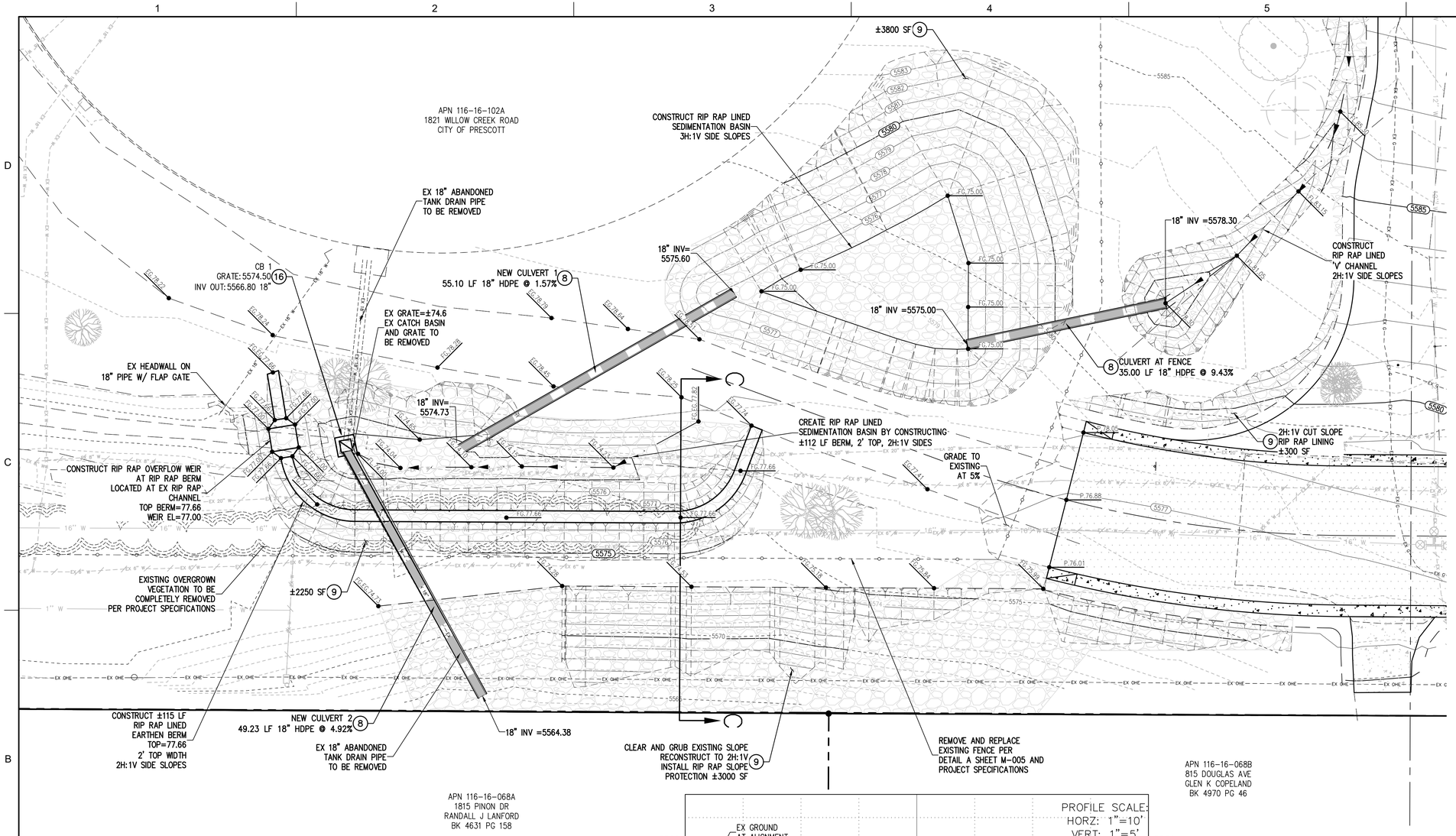

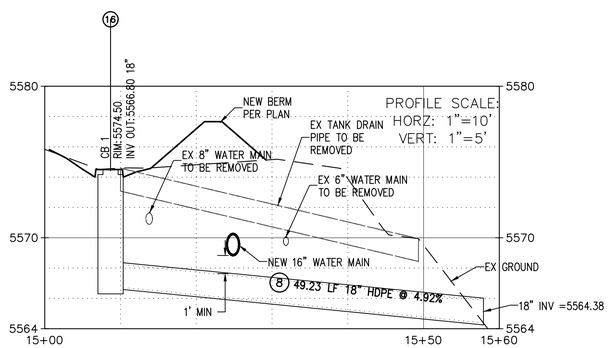

CULVERT 2

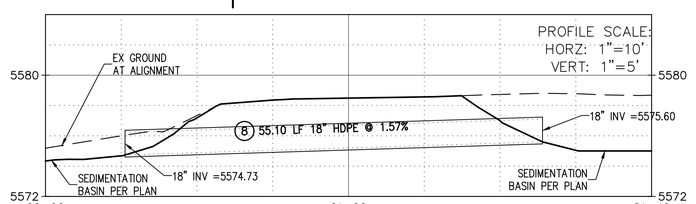

CULVERT 1

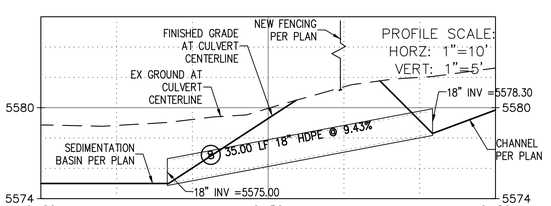

CULVERT AT FENCE

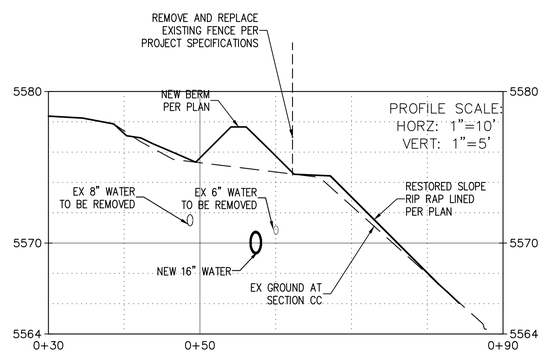

SLOPE SECTION CC

GRADING AND PAVING KEY

1. REMOVE EXISTING PAVEMENT SECTION TO REQUIRED DEPTH. CONSTRUCT NEW STRUCTURAL PAVEMENT SECTION PER PROJECT SPECIFICATIONS AND PROJECT SOILS REPORT.
2. SAWCUT AND MATCH WHERE SHOWN PER PROJECT SPECIFICATIONS.
3. ADJUST UTILITY FRAME, COVER, VALVE BOX, MANHOLE, AND/OR CLEANOUT PER QC SD 270Q, 391Q AND 422Q.
4. SAWCUT, REMOVE AND REPLACE AC PAVEMENT/TRENCH PER QC SD 200Q-1 AND PER PROJECT SPECIFICATIONS.
5. CONSTRUCT NEW ROLL CURB AND GUTTER PER QC SD 220Q-1 (TYPE 'D' ON THE HIGH SIDE, TYPE 'C' ON THE LOW SIDE). PROVIDE DOWELS INTO EXISTING CURB PER PLAN DETAIL.
6. REMOVE EXISTING DRIVEWAY IMPROVEMENTS AS NEEDED TO ACCOMMODATE IMPROVEMENTS. CONSTRUCT NEW CONCRETE DRIVEWAY WITH 6" PC CONCRETE ON 6" ABC PER PROJECT SPECIFICATIONS. MATCH EXISTING DRIVEWAY WIDTH AND CONFIGURATION.
7. CONSTRUCT CONCRETE STEPS AND HANDRAILS PER DETAIL SHEET C-001 AND PER PROJECT SPECIFICATIONS SECTION 340.
8. FURNISH AND INSTALL N-12 HDPE STORM DRAIN PIPE (SIZE AS NOTED) WITH WATER TIGHT FITTINGS PER PROJECT SPECIFICATIONS.
9. FURNISH AND INSTALL RIP RAP d_{50}=6", 12" THICKNESS ON FILTER FABRIC PER MAG SPECIFICATIONS SECTIONS 703 AND 796.
10. CONSTRUCT TANK SITE ACCESS ROAD PER TYPICAL SECTION DETAIL SHEET C-001.
11. CONSTRUCT THICKENED EDGE OF ASPHALT PER QC SD 201Q.
12. CONSTRUCT 5' CURB TRANSITION FROM ROLL CURB AND GUTTER TO FLUSH.
13. RELOCATE EXISTING SIGN. FURNISH AND INSTALL NEW SIGN POST AND BASE PER QC SD 131Q.
14. RELOCATE EXISTING MAILBOX. FURNISH AND INSTALL ADDITIONAL APPURTENANCES AS NEEDED FOR REINSTALLATION PER QC SD 134Q-1. COORDINATE REINSTALLATION WITH OWNER.
15. CONSTRUCT CONCRETE VALLEY GUTTER PER QC SD 240Q-2, MODIFIED TO 10' WIDE AND PER PLAN.
16. CONSTRUCT TYPE 'G' CATCH BASIN PER MAG SD 537.

N

0 10' 20'

Brown AND Caldwell

FOR CONSTRUCTION

Registered Professional Engineer (Civil) 22880 GARY R. KELLEY Date signed 8/9/23 ARIZONA, U.S.A.

CITY OF PRESCOTT ARIZONA

ZONE 41 PUMP STATION, TANK AND WATER MAIN

REVISIONS		
REV	DATE	DESCRIPTION

LINE IS 2 INCHES AT FULL SIZE

DESIGNED:	BWT
DRAWN:	BWT
CHECKED:	GRK
CHECKED:	
APPROVED:	

KWE PROJECT NUMBER 18-081

BC PROJECT NUMBER 152624

CLIENT PROJECT NUMBER CIP #17-009

SITE DRAINAGE IMPROVEMENTS

-

DRAWING NUMBER

C-202

SHEET NUMBER 24 OF 84

Path: X:\KWEIPROJECTS\2018\18081 ZONE 41 FILENAME: 18-081 DOUGLAS PAVEMENT PP.DWG PLOT DATE: 8/9/2023 5:28 PM CAD USER: USER

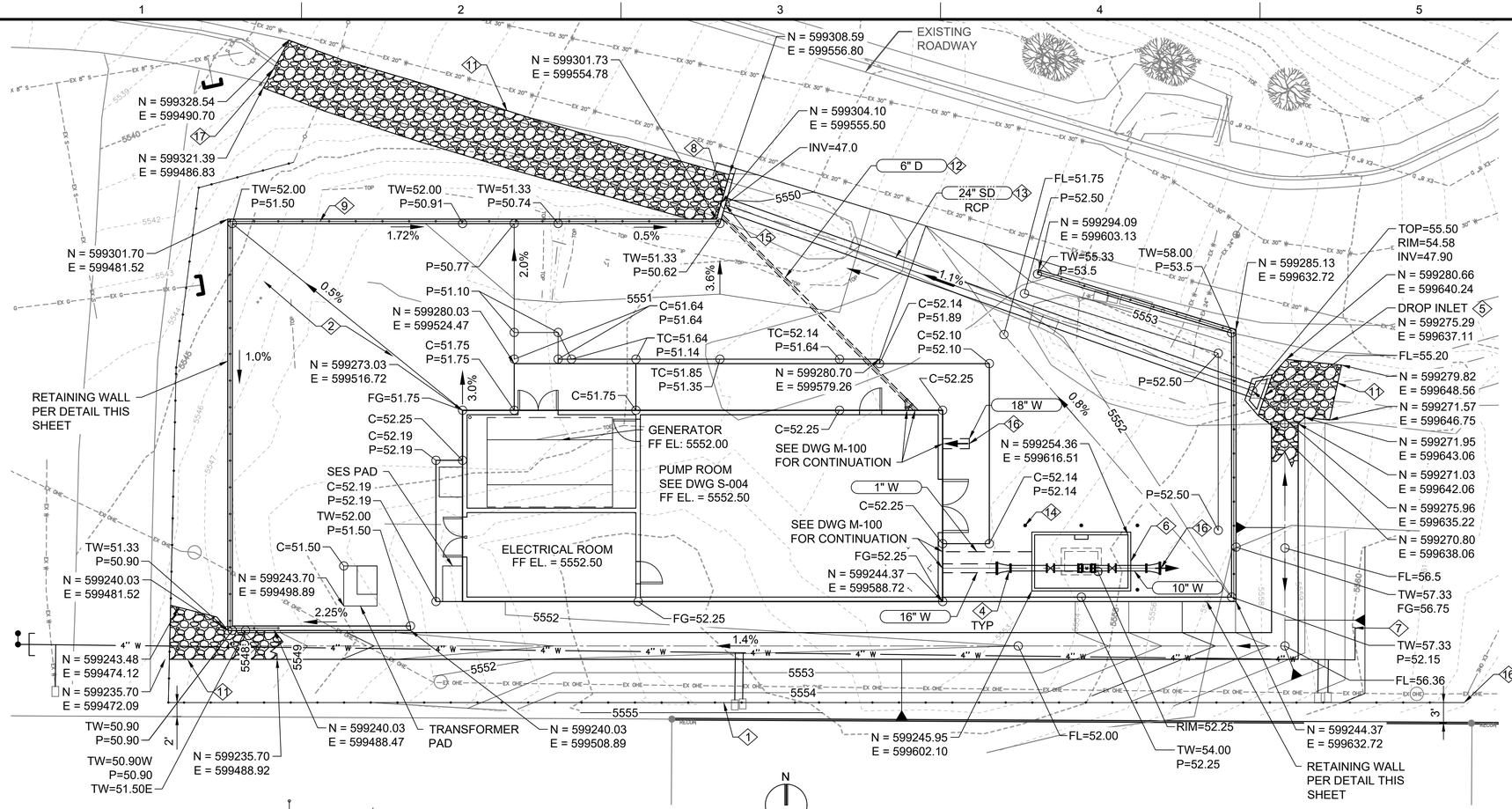

SITE PLAN

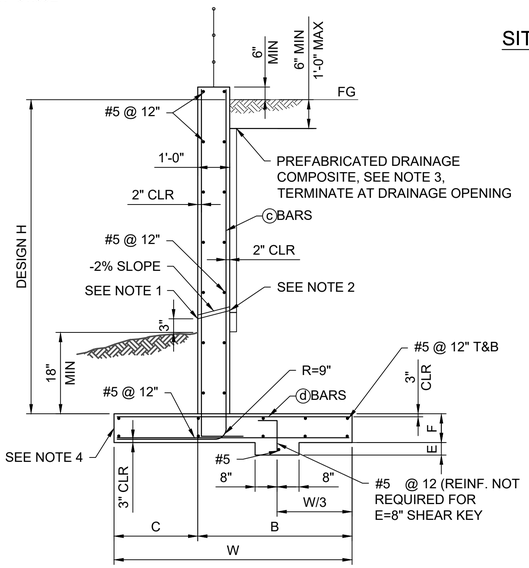

1 C-102 SPREAD FOOTING DETAIL
NOT TO SCALE

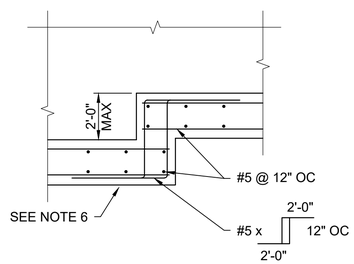

1 C-102 FOOTING STEP DETAIL
NOT TO SCALE

NOTES:
1. 4" DIAMETER DRAINS @ 25'-0" MAXIMUM CENTER TO CENTER. EXPOSED WALL DRAINS SHALL BE LOCATED 3" ± ABOVE FINISHED GRADE.
2. 6" SQUARE ALUMINUM OR GALVANIZED STEEL WIRE 1/4" MESH HARDWARE CLOTH, MINIMUM WIRE DIAMETER 0.0025" ANCHOR FIRMLY TO BACKFACE.
3. SITEDRAIN SHEET 110 SERIES, OR APPROVED EQUAL.
4. PLACE CONCRETE IN TOE AGAINST UNDISTURBED MATERIAL, EXCEPT AS PERMITTED BY THE ENGINEER.
5. CONCRETE STRENGTH FOR RETAINING WALL SHALL BE AS FOLLOWS: f'c=4,000 PSI
6. CONTRACTOR TO LOCATE FOOTING STEPS WHERE REQUIRED TO MAINTAIN SPECIFIED WALL HEIGHT. CONTRACTOR TO PROVIDE WLAL LAYOUT DRAWINGS FOR REVIEW DURING CONSTRUCTION.

TABLE OF REINFORCING STEEL, DIMENSIONS AND DATA		
DESIGN H	5'-6"	9-6'
W	4'-9"	7'-0"
C	2'-0"	2'-9"
B	2'-9"	4'-3"
ⓒBARS	#5 @ 12"	#6 @ 12"
ⓓBARS	#5 @ 12"	#5 @ 12"
F	1'-0"	1'-6"
E	0'-8"	1'-7"

GENERAL NOTES

1. THE KEY NOTES PROVIDED ON THIS DRAWING ARE SPECIFIC TO THIS DRAWING ONLY.
2. SHUTDOWN AND TEMPORARY INFRASTRUCTURE SHALL BE PROVIDED AND SEQUENCED ACCORDING THE CONTRACT SPECIFICATION 01 12 16.

KEY NOTES

1. INSTALL NEW CHAIN LINK FENCE PER DETAIL A ON DWG M-005
2. NEW ASPHALT CONCRETE PER PAVEMENT DETAIL ON C-001
3. NOT USED
4. 16" x 10" REDUCER
5. DROP INLET HEADWALL PER MAG STANDARD DETAIL 501.5
6. METER VAULT, SEE DETAIL A ON DWG M-102
7. SERVICE LINE CONNECTION. FOR CONTINUATION SEE DWG C-100
8. OUTLET HEADWALL TO BE U-TYPE PER MAG STANDARD DETAIL 501-1 AND 501-2
9. SAFETY RAIL PER COP STD DTL 145Q TYPE 3. RAILS ARE NOT TO BE PAINTED.
10. 6" D TO DAYLIGHT IN RIPRAP CHANNEL
11. ANGULAR RIPRAP PER MAG 703 (HAND-PLACED). D50 TO BE 6" AND DEPTH TO BE 12" EXCEPT AT RETAINING WALL FOOTING DEPTH SHALL BE FULL DEPTH TO TOP OF WALL FOOTING.
12. 6" D TO BE SLOPED AT 1%. DEPTH OF COVER ABOVE 6" D TO BE 2'-6" MIN AT ALL LOCATIONS
13. RCP SHALL BE CLASS III FOR LESS THAN OR EQUAL TO 15" OF COVER, AND CLASS II FOR 15" TO 24" OF COVER
14. PIPE BOLLARD PER COP STD DTL QCSD 140Q, TYPE 2
15. AT PIPE PENETRATION PROVIDE #5 X 6'-0" DIAGONAL REINFORCEMENT BARS AT EACH FACE PROVIDE ADDITIONAL WALL REINFORCEMENT EACH SIDE OF OPENING EQUAL TO 1/2 OF CUT BARS.
16. SEE DWG C-101 FOR CONTINUATION
17. EXTEND RIPRAP TO EXISTING CURB TO ALLOW DRAINAGE ONTO THE ROAD.

REVISED ON 10/15/2023

Brown AND Caldwell
2 N CENTRAL AVE
SUITE 1600
PHOENIX, AZ 85004

FOR CONSTRUCTION

Registered Professional Engineer (Civil) CERTIFICATE 43859 THERESA C. MULLER Date Signed 10/19/2023 ARIZONA, U.S.A.

CITY OF PRESCOTT ARIZONA

ZONE 41 PUMP STATION, TANK AND PIPELINE

REVISIONS		
REV	DATE	DESCRIPTION

LINE IS 2 INCHES AT FULL SIZE

DESIGNED: MWS
DRAWN: SCP
CHECKED: NW
CHECKED:
APPROVED: TM

FILENAME 152624-C-301.DWG
BC PROJECT NUMBER 152624
CLIENT PROJECT NUMBER 17-009

CIVIL

PUMP STATION SITE GRADING PLAN

DRAWING NUMBER
C-301
SHEET NUMBER
25 OF 84

COP1.png CAD USER: ANSON COX PLOT DATE: 8/11/2023 10:23 AM FILENAME: 152624-C-301.DWG Path: C:\BCPWD\D0474238

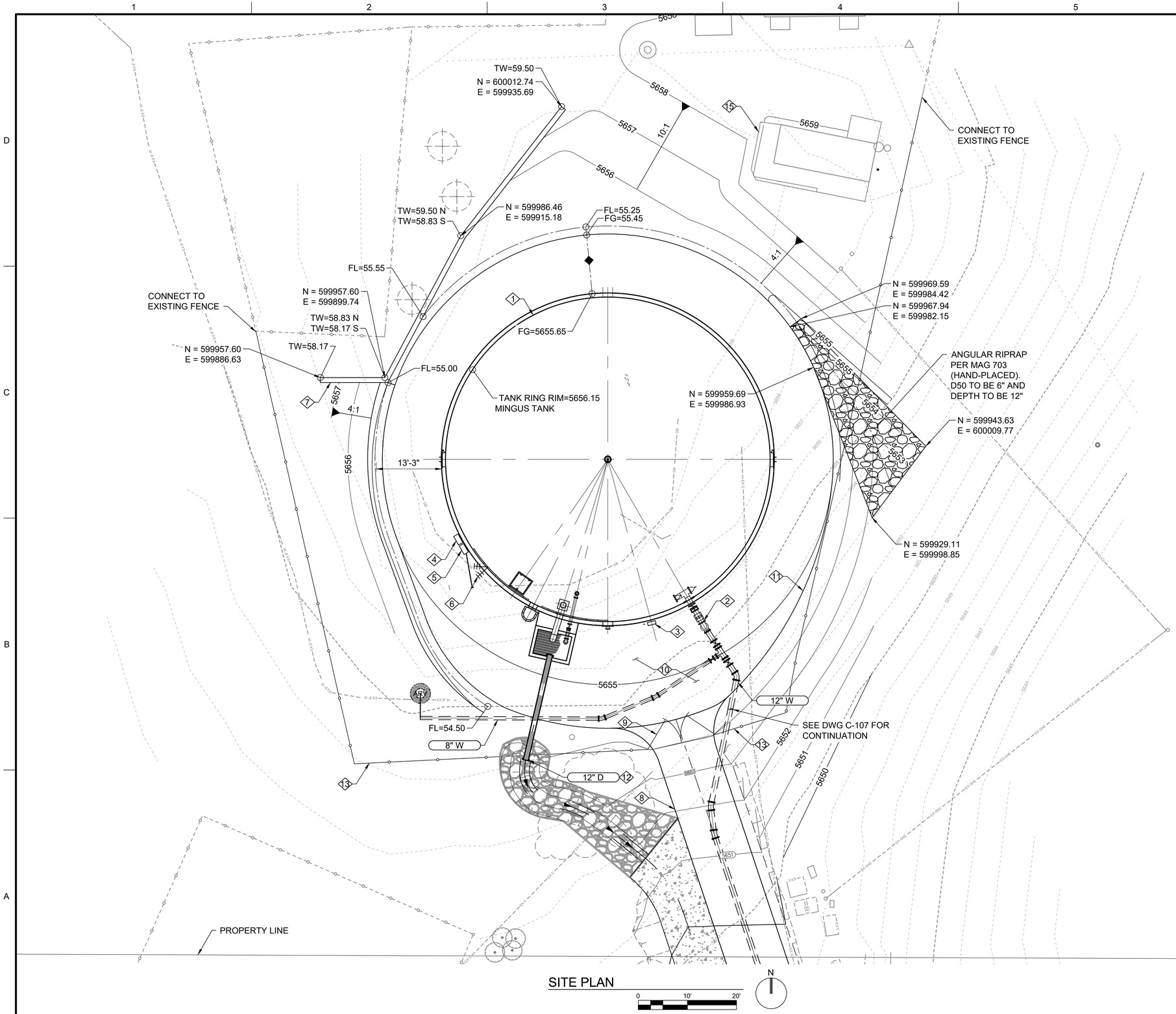

SITE PLAN

GENERAL NOTES

1. CONSTRUCTION SHALL BE SEQUENCED AND COMPLETED ACCORDING TO CONTRACT SPECIFICATIONS.
2. CONTRACTOR TO VERIFY EXISTING UTILITY LOCATIONS PRIOR TO CONSTRUCTION.
3. CONTRACTOR TO COORDINATE ELECTRICAL UTILITY INSTALLATION WITH UTILITY COMPANY.
4. CONTRACTOR TO PROTECT EXISTING TREES DURING CONSTRUCTION.
5. TANK DIMENSIONS. MATERIALS AND CONSTRUCTION TO BE PER SECTION 33 16 13.13 AND DWG M-104.
6. THE KEY NOTES PROVIDED ON THIS DRAWING ARE SPECIFIC TO THIS DRAWING ONLY.

KEY NOTES

1. INSTALL NEW 0.75 MILLION GALLON STEEL TANK. SEE DWG M-103.
2. INSTALL NEW WATER LINE. SEE DWG M-103 FOR CONNECTION TO TANK
3. GAUGE BOARD ASSEMBLY
4. SERVICE PEDESTAL
5. RTU ENCLOSURE
6. ANTENNAS, SURGE SUPPRESSORS, AND RADIO TRANSMISSION LINES.
7. RETAINING WALL PER DETAIL ON DRAWING C-301, WITHOUT HANDRAIL.
8. NEW SITE ACCESS ROAD. FOR CONTINUATION SEE DWG C-107.
9. NEW 14'-0" DOUBLE SWING SITE ACCESS GATE PER DETAIL A ON DWG M-005.
10. TANK ACCESS ROAD TO BE 1/2" TO 1" FRACTURED ROCK WITH NO FINES, 3" DEEP
11. ROAD AROUND TANK SHALL BE A MINIMUM WIDTH OF 12"-0" AND EXTEND TO AT LEAST 12'-0" BEYOND THE TANK FOUNDATION. OVERFLOW BOX AND ALL TANK APPURTENANCES.
12. FOR CONTINUATION SEE DWG C-107.
13. INSTALL NEW FENCE PER DETAIL A ON DWG M-005.
14. EXISTING TREES TO REMAIN.
15. EXISTING BUILDING TO REMAIN UNDISTURBED.

Brown AND Caldwell
2 N CENTRAL AVE
SUITE 1600
PHOENIX, AZ 85004

FOR CONSTRUCTION

Registered Professional Engineer (Civil) CERTIFICATE 43859 THERESA C. MULLER Date Signed 10/19/21 ARIZONA, U.S.A.

CITY OF PRESCOTT ARIZONA

ZONE 41 PUMP STATION, TANK AND PIPELINE

REVISIONS		
REV	DATE	DESCRIPTION

LINE IS 2 INCHES AT FULL SIZE

DESIGNED:	MWS
DRAWN:	SCP
CHECKED:	NW
CHECKED:	
APPROVED:	NW

FILENAME
152624-C-302.DWG

BC PROJECT NUMBER
152624

CLIENT PROJECT NUMBER
17-009

CIVIL

TANK SITE GRADING PLAN

DRAWING NUMBER
C-302

SHEET NUMBER
26 OF 84

Path: C:\BCPW\D0474238 FILENAME: 152624-C-302.DWG PLOT DATE: 8/11/2023 10:27 AM CAD USER: ANSON COX
COP1.png

GENERAL REQUIREMENTS:

1. THESE DRAWINGS, AND THEIR ASSOCIATED STRUCTURAL CALCULATIONS, HAVE BEEN PERFORMED USING STANDARDS OF PROFESSIONAL CARE AND COMPLETENESS NORMALLY EXERCISED UNDER SIMILAR CIRCUMSTANCES BY REPUTABLE STRUCTURAL ENGINEER'S IN THIS OR SIMILAR LOCALITIES. THEY NECESSARILY ASSUME THAT THE WORK DEPICTED WILL BE PERFORMED BY AN EXPERIENCED CONTRACTOR AND/OR WORKMEN WHO HAVE A WORKING KNOWLEDGE OF THE INTERNATIONAL BUILDING CODE CONVENTIONAL FRAMING REQUIREMENTS AND OF INDUSTRY ACCEPTED STANDARD GOOD PRACTICE. AS NOT EVERY CONDITION OR FRAMING ELEMENT IS (OR CAN BE) EXPLICITLY SHOWN ON THESE DRAWINGS, IT IS UNDERSTOOD THAT THE CONTRACTOR WILL USE INDUSTRY ACCEPTED STANDARD GOOD PRACTICE FOR ALL MISCELLANEOUS WORK NOT EXPLICITLY SHOWN.

2. THESE DRAWINGS REPRESENT THE FINISHED STRUCTURE. THEY DO NOT INDICATE THE METHOD OF CONSTRUCTION. THE CONTRACTOR SHALL BE SOLELY RESPONSIBLE FOR CONSTRUCTION MEANS, METHODS, TECHNIQUES, SEQUENCES AND PROCEDURES. CONSTRUCTION MATERIALS SHALL BE SPREAD OUT IF PLACED ON FRAMED CONSTRUCTION SUCH THAT DESIGN LIVE LOAD PER SQUARE FOOT AS STATED HEREIN IS NOT EXCEEDED. OPTIONS ARE FOR CONTRACTOR'S CONVENIENCE. IF AN OPTION IS USED, THE CONTRACTOR SHALL BE RESPONSIBLE FOR ALL NECESSARY CHANGES, AND SHALL COORDINATE ALL DETAILS, AT NO ADDITIONAL COST TO OWNER.

3. WHERE DISCREPANCIES OCCUR BETWEEN PLANS, DETAILS, GENERAL STRUCTURAL NOTES AND SPECIFICATIONS, THE GREATER REQUIREMENTS SHALL GOVERN. TYPICAL DETAILS AND NOTES ARE NOT NECESSARILY INDICATED ON THE PLANS, BUT SHALL APPLY NONE-THE-LESS. WHERE NO DETAILS ARE SHOWN, CONSTRUCTION SHALL CONFORM TO SIMILAR WORK ON THE PROJECT. DETAILS MAY SHOW ONLY ONE SIDE OF CONNECTION OR MAY OMIT INFORMATION FOR CLARITY.

4. ESTABLISH AND VERIFY ALL OPENINGS AND INSERTS FOR ARCHITECTURAL, MECHANICAL, PLUMBING AND ELECTRICAL WITH APPROPRIATE TRADES, DRAWINGS AND SUBCONTRACTORS PRIOR TO CONSTRUCTION. CONTRACTOR SHALL BE RESPONSIBLE FOR VERIFICATION OF ALL DIMENSIONS WITH ARCHITECTURAL DRAWINGS PRIOR TO START OF CONSTRUCTION. RESOLVE ANY DISCREPANCY WITH THE ARCHITECT AND STRUCTURAL ENGINEER.

5. ANY INSPECTIONS, SPECIAL (IBC CHAPTER 17) OR OTHERWISE THAT ARE REQUIRED BY THE BUILDING CODES, LOCAL BUILDING DEPARTMENTS, OR BY THESE PLANS SHALL BE DONE BY AN INDEPENDENT INSPECTION COMPANY OR THE BUILDING DEPARTMENT, SITE VISITS BY THE STRUCTURAL ENGINEER DO NOT CONSTITUTE AN OFFICIAL INSPECTION, UNLESS SPECIFICALLY CONTRACTED FOR.

6. SHOP DRAWINGS SHALL BE SUBMITTED FOR ALL STRUCTURAL ITEMS IN ADDITION TO ITEMS REQUIRED BY ARCHITECTURAL SPECIFICATIONS, THE CONTRACTOR SHALL REVIEW ALL SHOP DRAWINGS PRIOR TO SUBMITTAL. ITEMS NOT IN ACCORDANCE WITH CONTRACT DRAWINGS SHALL BE FLAGGED UPON HIS REVIEW. VERIFY ALL DIMENSIONS WITH ARCHITECT. ANY CHANGES, SUBSTITUTIONS, OR DEVIATIONS FROM ORIGINAL CONTRACT DRAWINGS SHALL BE CLOUDED. ANY OF THE AFOREMENTIONED WHICH ARE NOT CLOUDED OR FLAGGED BY SUBMITTING PARTIES, SHALL NOT BE CONSIDERED APPROVED AFTER THE STRUCTURAL ENGINEER'S REVIEW, UNLESS NOTED ACCORDINGLY. ANY STRUCTURAL ENGINEERING PROVIDED BY OTHERS AND SUBMITTED FOR REVIEW, SHALL BEAR THE SEAL OF A STRUCTURAL ENGINEER REGISTERED IN THE APPROPRIATE STATE. THE SHOP DRAWINGS DO NOT REPLACE THE ORIGINAL CONTRACT DRAWINGS. ITEMS OMITTED OR SHOWN INCORRECTLY AND ARE NOT FLAGGED BY THE STRUCTURAL ENGINEER ARE NOT TO BE CONSIDERED CHANGES TO ORIGINAL DRAWINGS. THE ADEQUACY OF ENGINEERING DESIGNS AND LAYOUT PERFORMED BY THE OTHERS RESTS WITH THE DESIGNING OR SUBMITTING AUTHORITY. REVIEWING IS INTENDED ONLY AS AN AID TO THE CONTRACTOR IN OBTAINING CORRECT SHOP DRAWINGS. RESPONSIBILITY FOR CORRECTNESS SHALL REST WITH THE CONTRACTOR. ALLOW (5) WORKING DAYS FOR THE STRUCTURAL ENGINEER'S REVIEW. ONE COPY OF EACH SUBMITTAL WILL BE RETAINED FOR THE STRUCTURAL ENGINEER'S RECORDS.

BASIS FOR DESIGN:

1. BUILDING CODE: 2018 EDITION OF THE IBC WITH CITY/COUNTY AMENDMENTS.

   RISK CATEGORY = III

2. VERTICAL LOADS:

LOCATION	LIVE / SNOW LOAD	DEAD LOAD
ROOF	30 PSF	15 PSF

3. SEISMIC DESIGN PARAMETERS:

ANALYSIS PROCEDURE	EQUIVALENT LATERAL FORCE PROCEDURE
IMPORTANCE FACTOR	Ie = 1.25
SITE CLASS	B
SEISMIC DESIGN CATEGORY	B
SPECTRAL RESPONSE ACCELERATIONS	Sms = 0.337, Sm1 = 0.102
SPECTRAL RESPONSE COEFFICIENTS	Sds = 0.225, Sd1 = 0.068
HORIZONTAL SHEAR TRANSFER ELEMENTS:	
PLYWOOD – FLEXIBLE DIAPHRAM(S)	R = 6.5
VERTICAL SHEAR TRANSFER ELEMENTS:	
INTERMEDIATE MASONRY SHEARWALL(S)	R = 3.5

REVISED ON 10/15/2023

4. WIND DESIGN PARAMETERS (STRENGTH):

ULTIMATE WIND SPEED	115 MPH(ULTIMATE) (3 SECOND GUST)
WIND EXPOSURE	C
IMPORTANCE FACTOR	Iw = 1.15
INTERNAL PRESSURE COEFFICIENT	+/–0.18
COMPONENT AND CLADDING PRESSURE	18.3 PSF

FOUNDATION NOTES:

1. FOUNDATIONS DESIGNED IN CONFORMANCE WITH RECOMMENDATIONS BY: **ENGINEERING TESTING CONSULTANTS, INC. REPORT NO. ETC 10115 DATED JULY 18, 2019. ADDENDUM DATED SEPTEMBER 27, 2023**

2. SITE PREPARATION AND GRADING REQUIREMENTS OF THE SOIL REPORT AND ANY ADDENDUM'S SHALL BE COMPLETED PRIOR TO CONSTRUCTION OF FOUNDATIONS. ANY TESTS OR INSPECTIONS REQUIRED BY THE SOIL REPORT SHALL BE PERFORMED PRIOR TO PLACEMENT OF FOUNDATION REINFORCING STEEL OR CONCRETE. ALTERATIONS TO SITE PREPARATION OR GRADING SHALL BE REPORTED TO THE GEOTECHNICAL ENGINEER PRIOR TO FOUNDATION CONSTRUCTION.

THE SOIL DESIGN VALUES FOR THE FOUNDATION ARE:

ALLOWABLE BEARING PRESSURE	2000 PSF
ALLOWABLE LATERAL PASSIVE PRESSURE	375 PSF/FT
ALLOWABLE LATERAL SLIDING COEFFICIENT	0.37
LATERAL BACKFILL PRESSURE (UNRESTRAINED)	37 PSF/FT
LATERAL BACKFILL PRESSURE (RESTRAINED)	57 PSF/FT
SITE CLASS	B

3. A ONE–THIRD INCREASE IN BEARING PRESSURES IS ALLOWED WITH SEISMIC OR WIND LOAD COMBINATIONS. LATERAL BEARING AND LATERAL SLIDING RESISTANCE MAY BE COMBINED.

FOUNDATION BEARING DEPTH
18" BELOW FINISHED GRADE

4. IN ACCORDANCE WITH THE GEOTECHNICAL REPORT, EXISTING FILL IN THE AREA OF THE NEW BUILDING SHALL BE REMOVED TO A MINIMUM OF 3 FEET BELOW EXISTING GRADE, OR FINISHED PAD GRADE, WHICHEVER DEPTH IS GREATER (BACKFILL IN ACCORDANCE WITH GEOTECHNICAL REPORT).

5. ALL FOUNDATIONS SHALL BEAR ON COMPACTED ENGINEERED FILL 18" MINIMUM BELOW FINISH GRADE. GRADE IS DEFINED AS TOP OF SLAB FOR INTERIOR FOOTINGS AND LOWEST ADJACENT GRADE WITHIN 5 FEET OF THE BUILDING FOR PERIMETER FOOTINGS. WHERE EXTERIOR PAVING OR CONCRETE IS DIRECTLY ADJACENT TO BUILDING, GRADE IS DEFINED AS TOP OF EXTERIOR PAVING AT LEAST 5 FEET FROM BUILDING. CONCRETE FOOTING EXCAVATIONS SHALL BE CLEAN AND FREE OF LOOSE DEBRIS OR UN–COMPACTED MATERIAL AT TIME OF CONCRETE PLACEMENT.

6. CONCRETE SLABS ON GRADE SHALL BE SUPPORTED ON A 6 INCH LAYER OF SELECT AGGREGATE FILL MATERIAL ACCORDING TO THE SPECIFICATIONS OF THE SOIL REPORT. FILL MATERIAL SHOULD BE MOISTENED, BUT NOT SATURATED JUST PRIOR TO PLACING CONCRETE.

7. BACKFILL AGAINST RESTRAINED WALLS SHALL NOT BE PLACED UNTIL AFTER THE WALLS ARE SUPPORTED BY THE COMPLETION OF INTERIOR FLOOR SYSTEMS AND CONCRETE OR GROUT STRENGTH HAS REACHED THE 28 DAY STRENGTH LISTED BELOW.

CONCRETE:

1. MINIMUM 28 DAY CONCRETE STRENGTH SHALL BE AS FOLLOWS:

USE:	CONCRETE STRENGTH:	REMARKS:
FOUNDATIONS	4500 PSI (1)	DESIGNED FOR 2500 PSI
CONCRETE SLABS ON GRADE	4500 PSI	W/O INSPECTION

2. ALL NORMAL WEIGHT CONCRETE SHALL BE REGULAR WEIGHT OF 150 POUNDS PER CUBIC FOOT USING HARD–ROCK AGGREGATES. AGGREGATE USED IN CONCRETE SHALL CONFORM TO ASTM C67 FOR ¾", ASTM C57 FOR 1" AND ASTM C467 FOR 1½" AGGREGATE.

3. TENSION LAP SPLICES OF REINFORCING STEEL IN CONCRETE SHALL BE AS FOLLOW:

REBAR SIZE	STANDARD LAP
#4	32"
#5	39"

LAP SPLICES FOR BEAMS AND FLOOR SLABS SHALL BE ACCORDING TO CHAPTER 12 OF ACI 318 OR LAP SCHEDULE ON THESE DRAWINGS.

NO TACK WELDING OF REINFORCING BARS ALLOWED WITHOUT PRIOR REVIEW OF PROCEDURE WITH THE STRUCTURAL ENGINEER. LATEST ACI CODE AND DETAILING MANUAL APPLY. PROVIDE BENT CORNER BARS TO MATCH AND LAP WITH HORIZONTAL BARS AT ALL CORNERS AND INTERSECTIONS PER TYPICAL DETAILS. VERTICAL WALL BARS SHALL BE SPLICED AT OR NEAR FLOOR LINES.

4. ALL DIMENSIONS SHOWING THE LOCATION OF REINFORCING STEEL NOT NOTED AS "CLEAR" OR "CLR" ARE TO CENTER OF STEEL. MINIMUM COVER FOR NON–PRESTRESSED CONCRETE REINFORCING SHALL BE AS FOLLOWS:

LOCATION:	MINIMUM COVER	TOLERANCE
CAST AGAINST EARTH (FOOTINGS)	3"	± ⅜"
SLABS ON GRADE	1½"	± ¼"
EXPOSED TO EARTH OR WEATHER – #5 AND SMALLER	1½"	± ⅜"
EXPOSED TO EARTH OR WEATHER – #6 AND LARGER	2"	± ⅜"
NOT EXPOSED TO WEATHER OR IN CONTACT WITH THE GROUND ROOF SLAB	1"	⅛"
STRUCTURAL SLABS AND WALLS	¾"	⅛"
BEAMS AND COLUMNS (PRIMARY) REINFORCEMENT, TIES, STIRRUPS AND SPIRALS	1½"	⅜"

5. MAXIMUM SLUMP FOR ALL CONCRETE SHALL BE 4". SLUMP FOR EXTERIOR SLABS SHALL BE 6". PORTLAND CEMENT SHALL CONFORM TO ASTM C150. TYPE V CEMENT SHALL BE USED FOR CONCRETE IN CONTACT WITH ALKALINE SOIL, AND TYPE II ELSEWHERE.

6. NO MORE THAN 90 MINUTES SHALL ELAPSE BETWEEN CONCRETE BATCHING AND CONCRETE PLACEMENT UNLESS APPROVED BY THE TESTING AGENCY.

7. CONCRETE PLACEMENT AND QUALITY SHALL BE PER RECOMMENDATIONS IN ACI 614, ACI 301 AND ACI 318. MECHANICALLY VIBRATE ALL CONCRETE WHEN PLACED, EXCEPT THAT SLABS ON GRADE NEED BE VIBRATED ONLY AROUND AND UNDER FLOOR DUCTS, ETC. CAST CLOSURE POUR, WHERE SHOWN ON PLANS AROUND COLUMNS AFTER COLUMN DEAD LOAD IS APPLIED. REMOVE ALL DEBRIS FROM FORMS BEFORE PLACING CONCRETE.

   ALL ITEMS TO BE CAST IN CONCRETE SUCH AS REINFORCING, DOWELS, BOLTS, ANCHORS, PIPES, SLEEVES, ETC., SHALL BE SECURELY POSITIONED IN THE FORMS BEFORE PLACING THE CONCRETE.

GENERAL STRUCTURAL NOTES

(APPLY UNLESS NOTED OTHERWISE ON PLANS/DETAILS)

CONCRETE (CONTINUED):

8. ALL CONCRETE SLABS ON GRADE SHALL BE DIVIDED INTO AREAS BY CONTROL JOINTS (KEYED OR SAW CUT) SUCH THAT ONE SLAB AREA DOES NOT EXCEED 250 SQUARE FEET, OR BE MORE THAN TWO TIMES LONGER THAN THE SLAB AREA WIDTH. THE FOUNDATION PLAN SHOWS A SUGGESTED METHOD OF CONTROL JOINT LAYOUT. IT IS RECOMMENDED THAT SAW CUTS BE MADE WITHIN 16 HOURS OF CONCRETE BATCHING.

   KEYED CONTROL JOINTS NEED ONLY OCCUR AT EXPOSED EDGES DURING POURING, ALL OTHER JOINTS MAY BE SAW CUT.

9. HORIZONTAL PIPES AND ELECTRICAL CONDUITS SHALL NOT BE EMBEDDED IN STRUCTURAL CONCRETE AND SLABS ON GRADE EXCEPT WHERE SPECIFICALLY APPROVED OR NOTED BY THE STRUCTURAL ENGINEER. PIPES AND CONDUITS SHALL NOT IMPAIR THE STRENGTH OF THE WORK.

10. FLY ASH MAY BE USED ONLY IF PERMITTED BY ARCHITECTURAL SPECIFICATIONS AND SHALL BE LIMITED TO 18 PERCENT OF CEMENTITIOUS MATERIALS AND SHALL HAVE A REPLACEMENT FACTOR OF 1.2 RELATIVE TO CEMENT REPLACED. NO FLY ASH ADDITIVES SHALL BE USED IN FLATWORK OR ARCHITECTURALLY EXPOSED CONCRETE.

11. COLD/HOT WEATHER CONCRETE CONSTRUCTION: PROTECT CONCRETE FROM DAMAGE OR REDUCED STRENGTH IN COMPLIANCE WITH ACI 305 AND 306.

MASONRY (CONCRETE BLOCK):

MINIMUM 28 DAY MASONRY STRENGTH SHALL BE 1500 PSI.

1. VERTICAL REINFORCING: #4 AT 48" ON CENTER FULL HEIGHT OF WALL, CENTERED IN GROUTED CELL AND AT ALL WALL INTERSECTIONS, CORNERS, WALL ENDS, JAMBS, OVER LINTELS, AND EACH SIDE OF CONTROL JOINTS (MINIMUM UNLESS NOTED OTHERWISE ON PLANS/DETAILS). TIE AT 8'–0" VERTICALLY, WITH SINGLE WIRE LOOP TIE OR EQUIVALENT. DOWEL ALL REINFORCING TO FOUNDATION WITH DOWELS TO MATCH AND LAP VERTICAL WALL OR COLUMN REINFORCING.

2. CONTROL JOINTS: UNLESS NOTED OTHERWISE ON THE PLANS, PLACE CONTROL JOINTS IN MASONRY WALLS SUCH THAT NO STRAIGHT RUN OF WALL EXCEEDS 24'–0". CONTROL JOINTS SHALL NOT OCCUR AT WALL CORNERS, INTERSECTIONS, ENDS, WITHIN 24" OF CONCENTRATED POINTS OF BEARING OR JAMBS, OR OVER OPENINGS UNLESS SPECIFICALLY SHOWN ON THE STRUCTURAL DRAWINGS.

3. HORIZONTAL REINFORCING: (MINIMUM UNLESS NOTED OTHERWISE ON PLANS/DETAILS) (2) #4 BARS IN CENTER OF 16 INCH DEEP MINIMUM CONTINUOUS GROUTED BOND BEAM AT ELEVATED FLOOR AND ROOF LINES. FOR 8 INCH THICK WALLS, ONE #4 BAR IN CENTER OF 8 INCH DEEP CONTINUOUS GROUTED BOND BEAM AT INTERVALS NOT TO EXCEED 48 INCHES ON CENTER AND AT TOP OF PARAPET OR FREE STANDING WALLS.

   PLACE HORIZONTAL BARS CONTINUOUS THROUGH CONTROL JOINTS. PROVIDE BENT BARS PER TYPICAL DETAILS, TO MATCH HORIZONTAL BOND BEAM REINFORCING, AT CORNERS AND WALL INTERSECTION TO MAINTAIN BOND BEAM CONTINUITY.

4. TENSION LAP SPLICES OF REINFORCING STEEL IN MASONRY SHALL BE AS FOLLOWS:

REBAR SIZE	STANDARD LAP
#4	24"
#5	30"

5. REINFORCING PLACEMENT TOLERANCES: ALL DIMENSIONS SHOWING THE LOCATION OF REINFORCING STEEL NOT NOTED AS "CLEAR" OR "CLR" ARE TO CENTER OF STEEL. TOLERANCES FOR PLACEMENT OF VERTICAL REINFORCING SHALL BE (±) ½" PERPENDICULAR TO WALL AND (±) 2" ALONG THE LENGTH OF THE WALL. PROVIDE ½" CLEARANCE BETWEEN MASONRY UNITS AND REINFORCING, AND REINFORCING RUNNING IN THE SAME DIRECTION. LAPS MAY BE BESIDE OR OVER THE REINFORCING BEING SPLICED.

6. BLOCK QUALITY: CONCRETE BLOCK SHALL BE HOLLOW LIGHTWEIGHT LOAD–BEARING CONCRETE MASONRY UNITS CONFORMING TO ASTM 90–75 WITH A MINIMUM COMPRESSIVE STRENGTH OF 1900 PSI. USE BOND BEAM UNITS AT HORIZONTAL REINFORCING.

7. MORTAR: MORTAR MIX SHALL CONFORM TO REQUIREMENTS OF THE IBC STANDARDS, TYPE M OR S. MORTAR SHALL HAVE A MINIMUM COMPRESSIVE STRENGTH OF 1800 PSI AT 28 DAYS.

8. GROUT: GROUT SHALL CONFORM TO REQUIREMENTS OF CHAPTER 21 OF THE IBC FOR COARSE GROUT. USE SUFFICIENT WATER FOR GROUT TO FLOW INTO ALL JOINTS OF THE MASONRY WITHOUT SEGREGATION. GROUT SHALL ATTAIN A MINIMUM COMPRESSIVE STRENGTH OF 2000 PSI AT 28 DAYS. ALL CELLS IN CONCRETE BLOCKS CONTAINING REINFORCING SHALL BE FILLED SOLID WITH GROUT. ALL MASONRY BELOW FINISHED FLOOR OR GRADE SHALL BE GROUTED SOLID. ALL GROUT SHALL BE MECHANICALLY VIBRATED.

   GROUT LIFTS OF 5 FEET OR LESS IS RECOMMENDED. FOR HIGHER GROUT LIFTS, CLEANOUTS (3"X3") AT THE BOTTOM OF ALL VERTICALLY REINFORCED CELLS SHALL BE PROVIDED. IN ADDITION, MECHANICAL DEVICES SHALL BE USED TO POSITION AND SECURE REINFORCING WHEN GROUT LIFTS EXCEED 5 FEET IN HEIGHT. IN SOLID GROUTED MASONRY, CLEANOUTS SHALL NOT BE SPACED MORE THAN 32" O.C.

9. BLOCK CONSTRUCTION: ALL BLOCKS SHALL BE PLACED IN RUNNING BOND CONSTRUCTION (UNLESS OTHERWISE NOTED) WITH ALL VERTICAL CELLS IN ALIGNMENT.

10. MISCELLANEOUS LINTELS:
    FOR MISCELLANEOUS OPENINGS (4'–8" OR LESS) NOT SHOWN ON PLANS OR IN A SCHEDULE, BUT REQUIRED BY OTHER DISCIPLINES (MECHANICAL, ELECTRICAL, PLUMBING, ETC.) THE FOLLOWING OPTIONS MAY BE USED IN 8" MASONRY WALLS:

    GROUTED REINFORCED MASONRY LINTEL: REINFORCE WITH (2) #4 HORIZONTAL BARS IN BOTTOM OF BOND BEAM OR LINTEL BLOCK AND SHALL BE GROUTED SOLID TO A MINIMUM DEPTH OF 12 INCHES. ALL LINTEL REINFORCING AND GROUT SHALL EXTEND 24" PAST JAMBS.

    THESE LINTELS, OR THE OPENING THEY SPAN, SHALL NOT BE PLACED SO AS TO INTERFERE WITH THE REQUIREMENTS OF OTHER STRUCTURAL ELEMENTS (I.E. BOND BEAMS, LINTELS, CONTROL JOINTS, CONCENTRATED POINTS OF BEARING, ETC.) WITHOUT THE PRIOR APPROVAL OF THE STRUCTURAL ENGINEER.

    SOLID GROUT SHALL BE PROVIDED BETWEEN WEBS AND MASONRY FACE SHELLS FOR FULL LENGTH OF ALL STEEL LINTELS. MORTAR MAY BE USED FOR GROUT FOR THIS PURPOSE ONLY. FACE UNITS, SOAPS, ROMANS, ETC., SHALL BE LAID WITH FULL HEAD AND BED JOINTS.

    FOR ADDITIONAL INFORMATION AT OPENINGS IN MASONRY WALLS, SEE TYPICAL DETAILS.

REINFORCING STEEL:

1. ASTM A615 GRADE 60 (FY = 60 KSI).

2. WELDING OF REINFORCING BARS SHALL BE MADE ONLY TO ASTM A706 GRADE 60 BARS AND ONLY USING E90 SERIES RODS. WELDING OF REINFORCING BARS SHALL BE MADE ONLY AT LOCATIONS SHOWN ON PLANS OR DETAILS.

3. REINFORCING BAR SPACING GIVEN ARE MAXIMUM ON CENTERS. ALL BARS PER CRSI SPECIFICATIONS AND HANDBOOK. DOWEL ALL VERTICAL REINFORCING TO FOUNDATION. SECURELY TIE ALL BARS IN LOCATION BEFORE PLACING CONCRETE.

STEEL:

1. MATERIALS: ROLLED W SHAPES, SHALL CONFORM TO ASTM A992 (FY=50 KSI). ALL OTHER STRUCTURAL STEEL SHAPES, ROLLED SECTIONS, BARS AND PLATES SHALL CONFORM TO ASTM A36 (FY = 36 KSI). ALL PIPE STEEL SHALL BE ASTM A501 (FY = 36 KSI) OR ASTM A53, TYPE E OR S, GRADE B (FY = 35 KSI). ALL TUBULAR STEEL SHALL BE ASTM A500 (FY = 46 KSI).

2. ALL WOOD TO STEEL BOLTS AND STUDS SHALL BE ASTM A307, UNLESS NOTED OTHERWISE. ALL EXPANSION BOLTS TO HAVE CURRENT ICBO RATING FOR MATERIAL INTO WHICH INSTALLATION TAKES PLACE. HEADED STUDS SHALL CONFORM TO ALL REQUIREMENTS OF THE LATEST EDITION OF THE "RECOMMENDED PRACTICES FOR STUD WELDING" AND THE "STRUCTURAL WELDING CODE" PUBLISHED BY AWS. ALL BOLTS, ANCHOR BOLTS, EXPANSION BOLTS, ETC. SHALL BE INSTALLED WITH STEEL WASHERS AT FACE OF WOOD OR AT SLOTTED HOLES IN STEEL SECTIONS.

3. ALL STRUCTURAL AND MISCELLANEOUS STEEL SHALL BE FABRICATED AND ERECTED IN ACCORDANCE WITH AISC SPECIFICATIONS FOR THE DESIGN, FABRICATION AND ERECTION OF STRUCTURAL STEEL FOR BUILDINGS, LATEST EDITION.

4. WELDING SHALL BE BY WELDERS HOLDING VALID CERTIFICATES AND HAVING CURRENT EXPERIENCE IN THE TYPE OF WELD SHOWN ON THE DRAWINGS OR NOTES. ALL WELDING SHALL USE E70 SERIES LOW HYDROGEN RODS UNLESS NOTED OTHERWISE. ALL WELDING PER LATEST AMERICAN WELDING SOCIETY STANDARDS. ALL WELDS ON DRAWINGS ARE SHOWN AS SHOP WELDS. CONTRACTOR MAY SHOP WELD OR FIELD WELD AT HIS DISCRETION. ALL FULL PENETRATION WELDS SHALL BE TESTED AND CERTIFIED BY AN INDEPENDENT TESTING LABORATORY.

5. STEEL TO STEEL BOLTED CONNECTIONS: HIGH STRENGTH BOLTS SHALL BE ASTM A325N AND SHALL BE INSTALLED AS BEARING–TYPE CONNECTIONS WITH THREADS INCLUDED IN SHEAR PLANE (TYPE "N" CONNECTION). BOLTS MAY BE TIGHTENED USING ANY AISC APPROVED METHOD.

6. DRYPACK SHALL BE 5,000 PSI FIVE STAR NON–SHRINK GROUT OR EQUIVALENT. INSTALL DRYPACK UNDER BEARING PLATES BEFORE FRAMING MEMBER IS INSTALLED. AT COLUMNS, INSTALL DRYPACK UNDER BASE PLATES AFTER COLUMN HAS BEEN PLUMBED BUT PRIOR TO FLOOR OR ROOF INSTALLATION.

WOOD:

1. SAWN LUMBER: FRAMING LUMBER SHALL COMPLY WITH THE LATEST EDITION OF THE GRADING RULES OF THE WESTERN WOOD PRODUCTS ASSOCIATION (WWPA) OR THE WEST COAST LUMBER INSPECTION BUREAU (WCLIB). ALL SAWN LUMBER SHALL BE STAMPED WITH THE GRADE MARK OF AN APPROVED LUMBER GRADING AGENCY. SAWN LUMBER SHALL HAVE THE FOLLOWING MINIMUM GRADE UNLESS NOTED OTHERWISE IN SCHEDULES:

USE:	MATERIAL:
2X STUDS	HEM–FIR NO. 2
JOISTS, TOP PLATES AND ALL OTHER SAWN LUMBER	DOUGLAS–FIR NO. 2 OR BETTER
BEAMS AND POSTS	DOUGLAS–FIR NO. 2 OR BETTER

2. PLYWOOD: ALL PLYWOOD SHALL BE C–D OR C–C SHEATHING CONFORMING TO STANDARD PS 1–95. LAY UP PLYWOOD WITH FACE GRAIN IN PERPENDICULAR TO SUPPORTS (ON ROOFS WHERE PLYWOOD IS LAID UP WITH FACE GRAIN PARALLEL TO SUPPORTS, USE A MINIMUM OF 5–PLY PLYWOOD, STAGGER JOINTS). ALL NAILING, COMMON NAILS. BLOCKING AT PANEL EDGES WHERE INDICATED ON PLANS. ALL PLYWOOD SHALL BE OF THE FOLLOWING NOMINAL THICKNESS, SPAN/INDEX RATING AND SHALL BE NAILED AS FOLLOWS UNLESS NOTED OTHERWISE ON THE PLANS:

LOCATION:	NOMINAL THICKNESS:	SPAN INDEX RATING:	EDGE ATTACHMENT:	FIELD ATTACHMENT:
ROOF	½"	32/16	10d AT 6" O.C.	10d AT 12" O.C.

   PLYWOOD ALTERNATE: AMERICAN PLYWOOD ASSOCIATION PERFORMANCE RATED SHEATHING MAY BE USED AS AN ALTERNATE TO PLYWOOD WITH PRIOR APPROVAL OF OWNER, ARCHITECT AND ROOFER. IT MAY NOT BE USED ON ROOFS WHERE BUILT–UP ROOF SYSTEM IS TO BE GUARANTEED BY ROOFER. RATED SHEATHING SHALL COMPLY WITH ICBO REPORT NER–108, EXPOSURE 1, AND SHALL HAVE A SPAN RATING EQUIVALENT TO OR BETTER THAN THE PLYWOOD IT REPLACES. ATTACHMENT AND THICKNESS (WITHIN 2/32") SHALL BE THE SAME AS THE PLYWOOD IT REPLACES. INSTALL PER MANUFACTURER'S RECOMMENDATIONS.

3. SILL PLATES RESTING ON CONCRETE OR MASONRY WITHIN 12" OF SOIL SHALL BE OF TREATED FIR OR FOUNDATION GRADE REDWOOD. SHEAR WALLS AND EXTERIOR WALL SILLS AT CONCRETE SLAB SHALL HAVE A MINIMUM OF (2) ½"ø ANCHOR BOLTS PER PIECE. PROVIDE ANCHOR BOLT AT 9" MAXIMUM, 4" MINIMUM FROM THE END OF EACH PIECE AT SPLICE OR END OF WALL. MAXIMUM ANCHOR BOLT SPACING SHALL BE 72" ON CENTER UNLESS NOTED OTHERWISE ON PLANS OR DETAILS. ALL ANCHOR BOLTS (OTHER THAN BOLTS FOR HOLDOWNS) SHALL EMBED 7" INTO CONCRETE. ANCHOR BOLTS FOR HOLDOWNS SHALL NOT BE CONSIDERED AS PART OF REQUIRED ANCHOR BOLTS ON SHEAR WALLS. ALL EXTERIOR WALLS SHALL BE SECURED WITH MINIMUM ANCHOR BOLTS. INTERIOR WALLS MAY BE SECURED TO CONCRETE WITH EITHER ANCHOR BOLTS OR POWER DRIVEN SHOT PINS UNLESS NOTED OTHERWISE ON PLANS.

4. BOLTING: ALL BOLTS IN WOOD CONNECTIONS SHALL CONFORM TO ASTM A307. BOLTS SHALL BE INSTALLED IN HOLES BORED WITH A BIT 1/16" LARGER THAN THE ø (DIAMETER) OF THE BOLT. BOLTS AND NUTS SEATING ON WOOD SHALL HAVE CUT STEEL WASHERS UNDER HEADS AND NUTS. NICK THREADS TO PREVENT LOOSENING.

5. PREFABRICATED WOOD TRUSSES: PREFABRICATED WOOD TRUSSES SHALL BE DESIGNED TO SUPPORT SELF WEIGHT PLUS LIVE LOAD AND SUPERIMPOSED DEAD LOADS. WHERE ATTIC SPACE CAN BE USED FOR STORAGE, A 40 PSF LIVE LOAD ON THE BOTTOM CHORD SHALL BE INCLUDED IN THE ANALYSIS. BRIDGING SIZE AND SPACING BY TRUSS MANUFACTURER UNLESS NOTED OTHERWISE. CONTRACTOR SHALL SUBMIT SHOP DRAWINGS WITH DESIGN CALCULATIONS SEALED BY A REGISTERED ENGINEER FOR REVIEW PRIOR TO MANUFACTURE.

   SHOP DRAWINGS SHALL SHOW ANY SPECIAL DETAILS REQUIRED AT BEARING POINTS. ALL CONNECTORS SHALL HAVE CURRENT ICBO APPROVAL. ADDITIONAL TRUSSES SHALL BE SUPPLIED AS REQUIRED TO SUPPORT MECHANICAL EQUIPMENT. PER IBC SECTION 2303.4 AND TPI–1: EACH TRUSS SHALL BE LEGIBLY BRANDED, MARKED OR OTHERWISE HAVE PERMANENTLY AFFIXED THERETO THE IDENTITY OF THE COMPANY MANUFACTURING THE TRUSS, THE DESIGN LOADS, AND THE TRUSS SPACING – WITHIN TWO FEET OF THE CENTER OF THE SPAN ON THE FACE OF THE BOTTOM CHORD. TOTAL LOAD DEFLECTIONS SHALL BE LIMITED TO SPAN/240. FLOOR LIVE LOAD DEFLECTIONS SHALL BE LIMITED TO SPAN/480.

DEFERRED SUBMITTALS:

(PER IBC SECTION 107.3.4.1)

1. FOR THE PURPOSES OF THIS SECTION, DEFERRED SUBMITTALS ARE DEFINED AS THOSE PORTIONS OF THE DESIGN WHICH ARE NOT SUBMITTED AT THE TIME OF THE APPLICATION AND WHICH ARE TO BE SUBMITTED TO THE BUILDING OFFICIAL WITH A SPECIFIED PERIOD.

2. DEFERRAL OF ANY SUBMITTAL ITEMS SHALL HAVE PRIOR APPROVAL OF THE BUILDING OFFICIAL. THE ARCHITECT OR ENGINEER OF RECORD SHALL LIST THE DEFERRED SUBMITTALS ON THE PLANS AND SHALL SUBMIT THE DEFERRED SUBMITTAL DOCUMENTS FOR REVIEW BY THE BUILDING OFFICIAL.

3. SUBMITTAL DOCUMENTS FOR DEFERRED SUBMITTAL ITEMS SHALL BE SUBMITTED TO THE ARCHITECT OR ENGINEER OF RECORD WHO SHALL REVIEW THEM AND FORWARD THEM TO THE BUILDING OFFICIAL WITH A NOTATION INDICATING THAT THE DEFERRED SUBMITTAL DOCUMENTS HAVE BEEN REVIEWED AND THAT THEY HAVE BEEN FOUND TO BE IN GENERAL CONFORMANCE WITH THE DESIGN OF THE BUILDING. THE DEFERRED SUBMITTAL ITEMS SHALL NOT BE INSTALLED UNTIL THEIR DESIGN AND SUBMITTAL DOCUMENTS HAVE BEEN APPROVED BY THE BUILDING OFFICIAL.

DEFERRED SUBMITTAL ITEMS:

REVISED ON 10/15/2023

ANCHORAGE DESIGN

STEEL TANK STRUCTURE AND FOUNDATION CALCULATIONS PER SPEC SECTION 33 16 13.13

SPECIAL INSPECTION ITEMS:

1. THE OWNER SHALL EMPLOY A SPECIAL INSPECTOR DURING CONSTRUCTION OF CERTAIN TYPES OF WORK. PER IBC SECTION 1704 AND THE STRUCTURAL ENGINEER OF RECORD, SPECIAL INSPECTION IS (IS NOT) REQUIRED AS FOLLOWS:

TYPE OF WORK:	REQUIRED:	REMARKS:
SOIL BEARING SUBGRADE	YES	PER GEOTECHNICAL REPORT
CONCRETE SLAB ON GRADE	NO	DESIGN BASED ON f'c=2500 PSI
CONCRETE FOUNDATIONS	NO	DESIGN BASED ON f'c=2500 PSI
REINFORCING STEEL FOR ALL CONCRETE/ MASON

CONNECTION SCHEDULE		
CONDITION	MAXIMUM SPAN	CONNECTION
JACK TRUSS AT GIRDER TRUSS	8'-0"	SIMPSON LU24 AT BOTTOM CHORD AND 2-16d AT TOP CHORD
JACK TRUSS AT HIP JACK TRUSS	8'-6"	SIMPSON LS30 AT BOTTOM CHORD AND 2-16d AT TOP CHORD
HIP JACK TRUSS AT GIRDER TRUSS	11'-6"	SIMPSON LS70 OR LTHJ AT BOTTOM CHORD AND 2-16d AT TOP CHORD

NOTE:
1. THE SCHEDULE ABOVE ASSUMES THAT THE GIRDER TRUSS IS SET BACK NO MORE THAN 8'-0" FROM THE WALL.
2. CONNECTIONS ARE FOR A TOTAL LOAD OF 55 PSF AND A LOAD DURATION FACTOR OF 1.15.

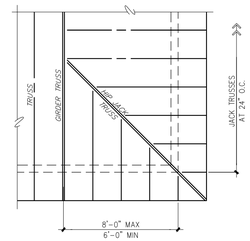

T15 TYPICAL CONNECTION SCHEDULE FOR PREFAB WOOD TRUSSES
02-W12 NO SCALE

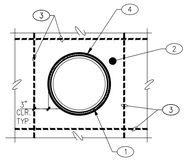

X PLAN

KEY NOTES:
1. PIPE PASSING THRU SLAB.
2. CONCRETE SLAB.
3. #4X48" LONG BARS PLACED AROUND PIPE AS SHOWN (IN ADDITION TO SLAB REINFORCING).
4. ¼" FIBER BOARD W/ SEALANT.

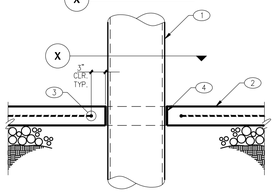

T16 PIPE PENETRATING CONCRETE SLAB
NO SCALE

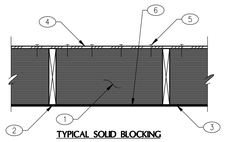

TYPICAL SOLID BLOCKING

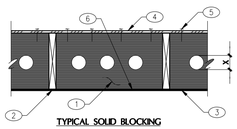

TYPICAL SOLID BLOCKING WITH PREFAB VENTILATION

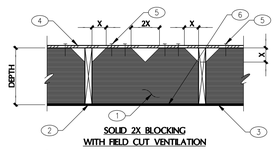

SOLID 2X BLOCKING WITH FIELD CUT VENTILATION

KEY NOTES:
1. SOLID BLOCKING TO BE TIGHT AGAINST PLYWOOD.
2. PREFAB WOOD TRUSS OR WOOD JOIST.
3. TOP OF WOOD PLATE OR BEAM AS OCCURS.
4. PLYWOOD SHEATHING.
5. EDGE NAILING.
6. TOE NAIL BLOCKING TO TOP PLATE W/ 16d NAILS AT 8" O.C.

VENTILATION OPENINGS	
DEPTH	X
6"	2"
8"	2.5"
10"	3"
12"	3"

NOTE:
A. FOR CONSTRUCTION BELOW BLOCKING, SEE PLAN AND DETAILS. BLOCKING IS CONTINUOUS.
B. INDIVIDUAL SHEAR BLOCKS MAY BE OMITTED EVERY 5TH BLOCK.

T17 ELEVATION - TYPICAL BLOCKING AT TRUSS END
02-W0502 NO SCALE

BOLT SIZE	CAST IN PLACE EMBEDMENT(MINIMUM)		EXPANSION ANCHOR EMBEDMENT(MINIMUM)	
	VERTICAL	HORIZONTAL	VERTICAL	HORIZONTAL
1/4"ø	4"	4"	2"	1.125"
3/8"ø	5"	4"	3"	1.5"
1/2"ø	7"	4"	4"	2"
5/8"ø	8"	5"	5"	2.5"
3/4"ø	9"	6"	6"	3"
7/8"ø	10"	7"	7"	3.5"
1"ø	11"	8"	9"	4"

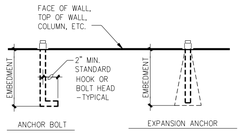

KEY NOTES:
ANCHOR OR BOLT DIAMETERS SPECIFIED IN DETAILS OR ON PLANS SHALL MEET THESE MINIMUM REQUIREMENTS FOR EMBEDMENT.

THICKNESS OF DRYPACK DOES NOT APPLY TOWARDS EMBEDMENT.

EXPANSION ANCHOR APPROVALS:
SIMPSON WEDGE-ALL (ESR-1396)
HILTI ANCHORS KWK-BOLT (ESR-1917).
POWERS POWER-STUD (ESR-2818)

T12 TYPICAL ANCHOR BOLT, AND EXPANSION BOLT SCHEDULE
02-S01A NO SCALE

CONNECTION	NAILING	TYPE
JOIST OR TRUSS BEARING ON SILL OR GIRDER	(3)-8d	TOENAIL
BRIDGING TO JOIST	(2)-8d	TOENAIL
SOLE PLATE TO JOIST OR BLOCKING	16d AT 16" O.C.	FACE NAIL
TOP PLATE TO STUD	(2)-16d	END NAIL
STUD TO SOLE PLATE	(2)-16d, END NAIL	-NA-
DOUBLE STUDS	16d AT 24" O.C.	FACE NAIL
DOUBLE TOP PLATES	16d AT 16" O.C.	FACE NAIL
TOP PLATES, LAP AND INTERSECTIONS	(2)-16d	FACE NAIL
CONTINUOUS HEADER, TWO PIECES	16d AT 16" O.C. ALONG EACH EDGE	-NA-
CEILING JOISTS TO PLATE	(3)-8d	TOENAIL
CONTINUOUS HEADER TO STUD	(4)-8d	TOENAIL
CEILING JOISTS, LAPS OVER PARTITIONS	(3)-16d	FACE NAIL
CEILING JOISTS TO PARALLEL RAFTERS	(3)-16d	FACE NAIL
RAFTER OR TRUSS TO PLATE	(3)-8d	TOENAIL
1" BRACE TO EACH STUD AND PLATE	(2)-8d	FACE NAIL
BUILT-UP CORNER STUDS	16d AT 24" O.C.	-NA-

NOTE:
1. MINIMUM NAILING SPECIFIED HEREIN SHALL BE PROVIDE UNLESS NOTED OTHERWISE ON PLANS, DETAILS OR GENERAL STRUCTURAL NOTES.
2. NAILING NOT NOTED ON THESE PLANS OR DETAILS SHALL BE PER I.B.C. TABLE 2304.9.1.

T13 MINIMUM NAILING SCHEDULE - UNLESS NOTED OTHERWISE
02-W01-2012 NO SCALE

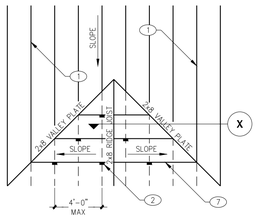

KEY NOTES:
1. PREFAB TRUSS PRIMARY FRAMING AT 24" O.C.
2. 2X4 VERTICAL SUPPORTS AT 4'-0" O.C. EACH WAY TO ALIGN WITH TRUSS BELOW - STAGGERED SPACING AT 2'-0" O.C. AS SHOWN.
3. PLYWOOD SHEATHING.
4. EDGE NAILING.
5. (2) 16d NAILS - TYPICAL.
6. 2X8 RIDGE JOIST.
7. 2X6 JOIST AT 24" O.C.
8. CONTINUOUS 2X8 VALLEY PLATE WITH (2) 16d TO PRIMARY FRAMING.

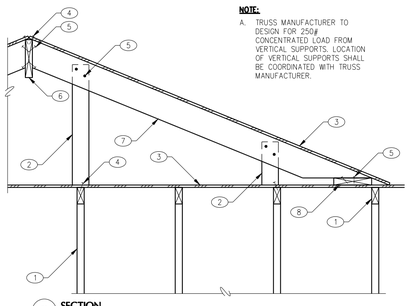

X SECTION

NOTE:
A. TRUSS MANUFACTURER TO DESIGN FOR 250# CONCENTRATED LOAD FROM VERTICAL SUPPORTS. LOCATION OF VERTICAL SUPPORTS SHALL BE COORDINATED WITH TRUSS MANUFACTURER.

T14 TYPICAL OVERBUILD FRAMING
02-W03 NO SCALE

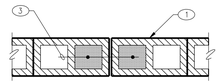

PLAN

KEY NOTES:
1. MASONRY WALL.
2. CONTROL JOINT.
3. 1 VERTICAL BAR EACH SIDE IN SOLID GROUTED CELLS TO MATCH VERTICAL WALL REINFORCING.
4. BOND BEAM REINFORCING DOES NOT CONTINUE THRU CONTROL JOINT.

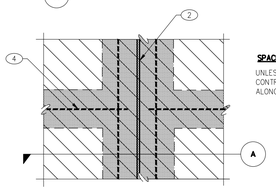

SPACING NOTE:
UNLESS NOTED OTHERWISE, PLACE CONTROL JOINTS AT 24'-0" O.C. ALONG WALL.

T8 ELEVATION-CONTROL JOINT IN MASONRY FENCE/RETAINING WALL
02-M0302 NO SCALE

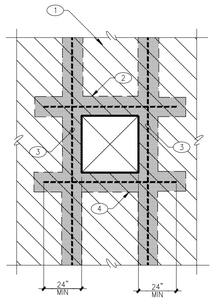

KEY NOTES:
1. MASONRY WALL.
2. LINTEL PER PLAN OR G.S.N. - GROUT SOLID.
3. VERTICAL BARS IN GROUTED CELL TO MATCH VERTICAL WALL REINFORCING FULL HEIGHT OF WALL.
4. (2)-#5 IN 8" DEEP SOLID GROUTED BOND BEAM - BEND BARS UP AT CORNERS.

T9 ELEVATION - TYPICAL OPENING IN MASONRY WALL
02-M0401 NO SCALE

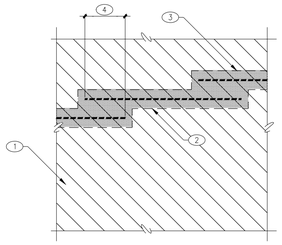

KEY NOTES:
1. MASONRY WALL.
2. SOLID GROUTED BOND BEAM.
3. BOND BEAM REINFORCING.
4. MINIMUM LAP PER G.S.N..

T10 ELEVATION - STEPPED MASONRY WALL BOND BEAM
02-M0601 NO SCALE

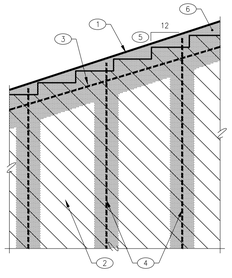

KEY NOTES:
1. 16" DEEP SOLID GROUTED BOND BEAM.
2. MASONRY WALL.
3. BOND BEAM REINFORCING.
4. VERTICAL WALL REINFORCING.
5. SLOPE PER PLAN OR ARCHITECTURAL DRAWINGS.
6. SIDES OF BOND BEAM TO BE FORMED OR MADE FROMCUT BLOCK.

T11 ELEVATION - SLOPED BOND BEAM AT TOP OF MASONRY WALL
02-M0602 NO SCALE

KEY NOTES:
1. FINISHED GRADE WHERE OCCURS.
2. DO NOT EXCAVATE A TRENCH CLOSER THAN A 45 DEGREE ANGLE TO BELOW BOTTOM FOOTING OR FOUNDATION.
3. BOTTOM OF CONCRETE FOOTING.
4. BOTTOM OF TRENCH.

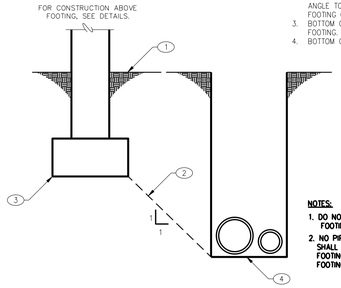

NOTES:
1. DO NOT UNDERCUT EXISTING FOOTINGS.
2. NO PIPE OR OTHER UTILITIES SHALL PASS THRU WALL FOOTINGS OR UNDER COLUMN FOOTINGS.

T4 TRENCH PARALLEL TO CONTINUOUS STRIP FOOTING
02-F04 NO SCALE

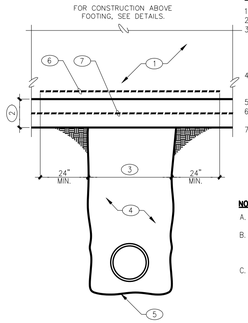

KEY NOTES:
1. STEM WALL.
2. CONCRETE FOOTING.
3. 2'-0" MAXIMUM - WHERE TRENCH EXCEEDS 2'-0" NOTIFY STRUCTURAL ENGINEER PRIOR TO PLACEMENT OF FOOTING.
4. BACKFILL AND RE-COMPACT TRENCH PER SOILS REPORT AND SPECIFICATIONS.
5. BOTTOM OF TRENCH.
6. (2) #4 HORIZONTAL CENTERED OVER TRENCH.
7. CONTINUOUS REINFORCING FOR CONCRETE STRIP FOOTING, SEE SCHEDULE.

NOTES:
A. DO NOT UNDERCUT EXISTING FOOTINGS.
B. NO PIPE OR OTHER UTILITIES SHALL PASS THRU WALL FOOTINGS OR UNDER COLUMN FOOTINGS.
C. VERTICAL REINFORCING IN STEMWALL NOT SHOWN FOR CLARITY.

T5 PIPE PASSING BELOW WALL FOOTING IN DEEP TRENCH
02-F05 NO SCALE

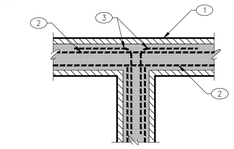

KEY NOTES:
1. MASONRY WALL.
2. BOND BEAM REINFORCING.
3. CORNER BARS SAME SIZE AND SPACING AS HORIZONTAL REINFORCING - MINIMUM LAP PER G.S.N..

T6 PLAN - CORNER REINFORCING IN MASONRY WALLS
02-M0201 NO SCALE

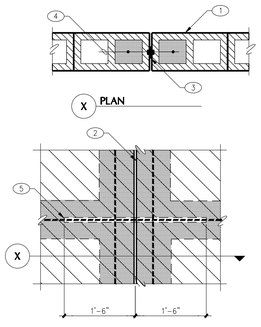

KEY NOTES:
1. MASONRY WALL.
2. CONTROL JOINT.
3. CONTROL JOINT MATERIAL PER ARCHITECTURAL DRAWINGS AND SPECIFICATIONS.
4. (1) VERTICAL BAR EACH SIDE IN SOLID GROUTED CELLS TO MATCH VERTICAL WALL REINFORCING.
5. CONTINUOUS BOND BEAM BARS - WRAP BARS WITH MASTIC FOR BOND BREAK.

NOTES:
BOND BEAM BARS SHALL NOT BE LAPPED WITHIN 8'-0" OF CONTROL JOINT.

T7 CONTROL JOINT IN MASONRY WALL
02-M0301 NO SCALE

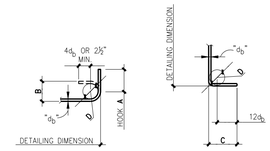

180° HOOK 90° HOOK

REBAR SIZE	END HOOKS ALL GRADES			
	180° HOOKS	90° HOOKS	BEND	
	A	B	C	D
#4	6"	4"	8"	3"
#5	7"	5"	10"	3.75"

T1 TYPICAL STEEL REINFORCING HOOK SCHEDULE
02-C01.1 NO SCALE

KEY NOTES:
1. MINIMUM LAP PER G.S.N. (24" MIN.) - TYPICAL.
2. TOP OF WALL FOOTING.
3. REGULAR FOOTING THICKNESS AS SHOWN ON PLAN OR FOOTING SCHEDULE.

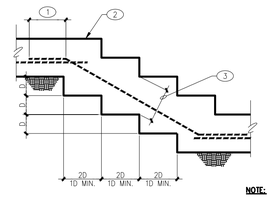

NOTE:
D = 2'-0" MAXIMUM.

T2 TYPICAL STEP IN CONCRETE FOOTING
02-F01 NO SCALE

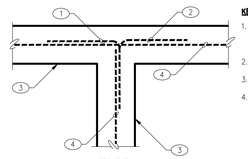

KEY NOTES:
1. CORNER BARS SAME SIZE AND SPACING AS HORIZONTAL REINFORCING. MINIMUM LAP PER G.S.N.
2. ALTERNATE DIRECTION OF BENDS.
3. CONCRETE STEM WALL OR FOOTING.
4. REINFORCING PER PLANS AND SCHEDULES.

T3 PLAN - CORNER REINFORCING IN CONCRETE FOOTINGS AND/OR CONCRETE STEM WALLS
02-F02 NO SCALE

This drawing is the property of FROST Structural Engineering, Inc. Legally, the drawing can NOT be copied in whole or in pieces. It is only to be used for the project and site specifically identified hereon and is not to be used on any other project. Contractor shall carefully review all dimensions, details, and conditions and report at once any error, inconsistency or omission discovered before construction. The contractor assumes full liability for deviations from the intent of these plans.

JOB NO.: 2019-0120 | PROJECT MANAGER: PETE C. | CAD OPERATOR: MJS

FROST STRUCTURAL ENGINEERING
1678 Oaklawn Drive, Suite C
Prescott, Arizona 86305
phone: 928.776.4757
fax: 928.776.4931
info@frost-structural.com

Brown AND Caldwell
MICHAEL TAYLOR ARCHITECTS, INC.

FOR CONSTRUCTION

REGISTERED PROFESSIONAL ENGINEER
CERTIFICATE NO.
27341
RICHARD K. FROST
10.6.23
DATE SIGNED
ARIZONA U.S.A.
EXPIRES 9/30/2026

CITY OF PRESCOTT ARIZONA

ZONE 41 PUMP STATION, TANK, AND WATERLINE

REVISIONS

REV	DATE	DESCRIPTION

LINE IS 2 INCHES AT FULL SIZE

DESIGNED: PJC
DRAWN: MJS
CHECKED: RKF
CHECKED:
APPROVED: RKF

FILENAME
S-002.dwg
BC PROJECT NUMBER
152624
CLIENT PROJECT NUMBER
2019-0120

STRUCTURAL

GENERAL STRUCTURAL NOTES CONT. AND TYPICAL DETAILS T-SERIES

DRAWING NUMBER
S-002
SHEET NUMBER
28 OF 84

Path: W:\PROJECTS\AZ\0-ARCHIVE\JOBS\2019\2019-0120_ZONE 41 PS\CAD\1 SHEETS FILENAME: S-002.DWG PLOT DATE: 10/8/2023 8:37 PM CAD USER: RICK FROST

WALL REINFORCING (W) SCHEDULE

MARK	THICKNESS	REINFORCING	REMARKS
W1	8" MASONRY	#4 AT 48" O.C. CENTERED	SOLID GROUT, (1) #4 HORIZONTAL AT 48" O.C. W/ STANDARD 180° HOOK AROUND VERTICAL REINFORCING AT WALL CORNERS, ENDS, AND JAMBS.
W2	8 MASONRY	#5 AT 8" O.C. CENTERED	SOLID GROUT, (1) #4 HORIZONTAL AT 48" O.C. W/ STANDARD 180° HOOK AROUND VERTICAL REINFORCING AT WALL CORNERS, ENDS, AND JAMBS.

TYPICAL JAMB REINFORCING FOR OPENING GREATER THAN 40" WIDE.

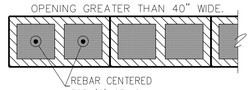

CONCRETE WALL FOOTING (WF) SCHEDULE

FOR CONSTRUCTION ABOVE FOOTING, SEE DETAILS.

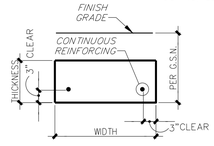

STRIP FOOTING

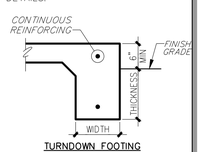

TURNDOWN FOOTING

MARK	DIMENSIONS WIDTH	DIMENSIONS THICKNESS	FOOTING REINFORCING	FOOTING TYPE
WF1	16"	12"	(2) #4 CONTINUOUS	STRIP
WF2	4'-4"	12"	(4) #4 CONTINUOUS AND (1) #4 TRANSVERSE AT 16" O.C. TOP & BOTTOM	STRIP
WF3	SEE DETAIL 106 FOR SITE RETAINING WALL FOOTINGS			STRIP
WF4	8"	12" MIN	(2) #4 CONTINUOUS	TURNDOWN

WALL SCHEDULE

-HATCHING INDICATES STRUCTURAL ELEMENT CONTINUES TO THE NEXT LEVEL (VERIFY WITH ARCHITECTURAL DRAWINGS).
-SEE PLAN SCHEDULES, DETAILS, AND GENERAL STRUCTURAL NOTES FOR ADDITIONAL INFORMATION.

TYPICAL STEM WALL	8" CMU STEM WALL UP TO 4'-0" RETAINING #4 AT 48" O.C. VERTICAL #4 AT 48" O.C. HORIZONTAL CENTERED IN WALL
AS SEEN ON PLANS	INDICATES-
	8" MASONRY (CMU) WALL. MINIMUM REINFORCING UNLESS NOTED OTHERWISE: VERTICAL: #4 AT 48" O.C. HORIZONTAL: #4 AT 48" O.C. MAXIMUM.

FOUNDATION PLAN NOTES

1. VERIFY ALL DIMENSIONS WITH ALL ARCHITECTURAL DRAWINGS.
2. ALL SCHEDULED MARK DESIGNATIONS MAY NOT NECESSARILY BE FOUND ON THIS PLAN. SCHEDULES ARE TYPICAL TO THIS PROJECT.
3. THE DEPTH OF FOOTING DIMENSION INDICATED IN THE G.S.N. IS A MINIMUM. FOUNDATION CONTRACTOR SHALL COORDINATE WITH THE SOILS REPORT AND OTHER TRADES TO INSURE THAT THESE MINIMUMS ARE SUFFICIENT FOR THE WORK. SEE TYPICAL DETAILS FOR ADDITIONAL REQUIREMENTS.
4. WF1, WF2, ETC. – AS SHOWN ON PLAN INDICATES A CONTINUOUS WALL FOOTING. SEE WALL FOOTING SCHEDULE FOR ADDITIONAL INFORMATION.
5. W1, W2, ETC. – AS SHOWN ON PLAN INDICATES WALL REINFORCING. SEE WALL REINFORCING SCHEDULE FOR ADDITIONAL INFORMATION.
6. CCJ – AS SHOWN ON PLAN INDICATES LOCATION OF EITHER A KEYED OR A SAW CUT CONTROL JOINT IN THE SLAB ON GRADE AT CONTRACTOR'S OPTION. SEE GENERAL STRUCTURAL NOTES AND DETAIL 101.
7. VERIFY EXACT SIZE AND LOCATION OF DEPRESSED AND/OR RAISED SLABS WITH ARCHITECTURAL DRAWINGS.
8. FOR SIDEWALK AND LANDING LOCATIONS, SEE ARCHITECTURAL DRAWINGS.
9. MCJ – AS SHOWN ON PLAN INDICATES A MASONRY CONTROL JOINT IN A MASONRY WALL. SEE GENERAL STRUCTURAL NOTES AND TYPICAL DETAIL.
10. VERIFY ALL EQUIPMENT, LOCATIONS, SIZES, ETC. ANCHOR RODS, (IF REQUIRED) MOUNTING DETAILS, ETC. BY OTHERS. VERIFY MECHANICAL AND ELECTRICAL SLEEVE REQUIREMENTS W/ OTHERS.
11. REFER TO DETAIL **106** FOR MISCELLANEOUS MASONRY SITE RETAINING WALLS.

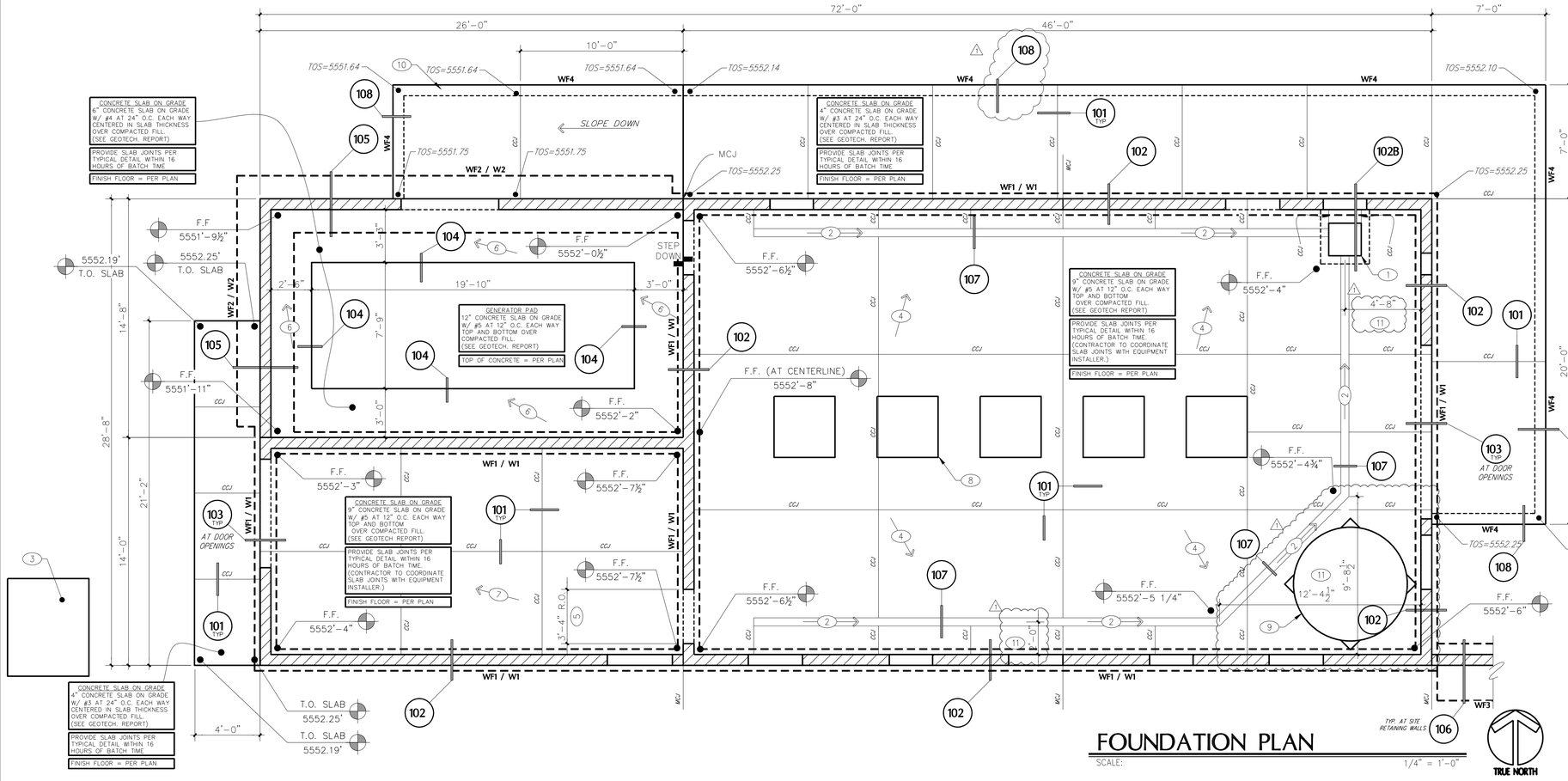

FOUNDATION PLAN

SCALE: 1/4" = 1'-0"

PLAN KEYNOTES

1. CAST IN PLACE (C.I.P.) SUMP PIT DRAIN, SEE MECHANICAL DRAWINGS FOR SIZE AND OTHER REQUIREMENTS. 6" THICK WALLS AND FLOOR w/ #3 @ 8" o.c. EACH WAY, VOLCLAY RX101 WATERSTOP AT ALL COLD JOINTS, CAST MONOLITHIC WITH WALL FOOTING.
2. TRENCH DRAINS PER DETAIL **107**. SLOPE DOWN 0.5% TOWARD SUMP PIT.
3. 6"X5'-0"X6'-0" TRANSFORMER CONCRETE PAD VERIFY SIZE, LOCATION, AND FINISH CONCRETE ELEVATION W/ ARCHITECTURAL DRAWINGS. PROVIDE #4 AT 24" O.C. EACH WAY CENTERED IN SLAB THICKNESS OVER COMPACT FILL (SEE GEOTECHNICAL REPORT).
4. SLOPE PUMP ROOM FLOORS DOWN 1% TOWARD FLOOR DRAINS AS INDICATED IN PLAN.
5. VERIFY ALL OPENINGS WITH ARCHITECTURAL DRAWINGS.
6. SLOPE GENERATOR ROOM FLOORS DOWN 1% TOWARD NORTHWEST CORNER OF ROOM AS INDICATED IN PLAN.
7. SLOPE ELECTRICAL FLOOR DOWN AS NOTED.
8. (5) CONCRETE PUMP PADS. SEE MECHANICAL DRAWINGS (M-100) FOR LOCATION. SEE MECHANICAL DRAWING M-002 FOR DETAILS OF CONCRETE PUMP PAD.
9. SURGE TANK. SEE MECHANICAL DRAWINGS FOR LOCATION AND MOUNTING REQUIREMENTS.
10. STEEL HANDRAIL, SEE ARCHITECTURAL DRAWINGS FOR LOCATIONS AND SPECIFICATIONS.
11. VERIFY SUMP AND TRENCH DRAIN LOCATIONS WITH ARCHITECTURAL AND MECHANICAL DRAWINGS.

This drawing is the property of FROST Structural Engineering, Inc. Legally, the drawing can NOT be copied in whole or in pieces. It is only to be used for the project and site specifically identified hereon and is not to be used on any other project. Contractor shall carefully review all dimensions, details, and conditions and report at once any error, inconsistency or omission discovered before construction. The contractor assumes full liability for deviations from the intent of these plans.

JOB NO.: 2019-0120 | PROJECT MANAGER: PETE C. | CAD OPERATOR: MJS

FROST STRUCTURAL ENGINEERING
1678 Oaklawn Drive, Suite C
Prescott, Arizona 86305
phone: 928.776.4757
fax: 928.776.4931
info@frost-structural.com

Brown AND Caldwell
MICHAEL TAYLOR ARCHITECTS, INC.

FOR CONSTRUCTION

Registered Professional Engineer (Structural)
CERTIFICATE NO.
27341
RICHARD K. FROST
DATE SIGNED
10.6.23
ARIZONA U.S.A.
EXPIRES 9/30/2026

CITY OF PRESCOTT ARIZONA

ZONE 41 PUMP STATION, TANK, AND WATERLINE

REVISIONS

REV	DATE	DESCRIPTION
1	10-26-2021	CITY REVIEW COMMENTS

LINE IS 2 INCHES AT FULL SIZE

DESIGNED: PJC
DRAWN: MJS
CHECKED: RKF
CHECKED:
APPROVED: RKF

FILENAME S-004.dwg
BC PROJECT NUMBER 152624
CLIENT PROJECT NUMBER 2019-0120

STRUCTURAL

FOUNDATION PLAN

DRAWING NUMBER
S-004

SHEET NUMBER
29 OF 84

Path: W:\PROJECTS\A2\0-ARCHIVE\JOBS\2019\2019-0120_ZONE 41 PS\CAD\1 SHEETS FILENAME: S-004.DWG PLOT DATE: 10/8/2023 8:37 PM CAD USER: RICK FROST

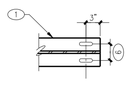

KEY NOTES:

1. STEEL MONORAIL BEAM.
2. MASONRY WALL.
3. (2) #5 IN 8" DEEP X 12'-0" LONG GROUTED BOND BEAM.
4. BOND BEAM REINFORCING PER GSN.
5. (2) ¾"ø THREADED STUDS WELDED TO BEARING PLATE AT BEAM GAUGE WITH NUT AND WASHER.
6. 2" LONG HORIZONTALLY SLOTTED HOLE ON BEAM GAUGE-EACH SIDE OF WEB.
7. 6"X8"X⅜" STEEL BEARING PLATE WITH (2) ⅝"X12" LONG REBAR DOWELS OVER 1"± DRYPACK.
8. 1'-0" OR AS DETERMINED BY OWNER.
9. L4X4X¼X0'-7" EACH SIDE W/ ⅜" FITTED STIFFENER AS SHOWN. BOLT TO MONORAIL BEAM W/ (2) ¾"ø A325 BOLTS.
10. GROUT BEAM POCKET SOLID AFTER ERECTION.

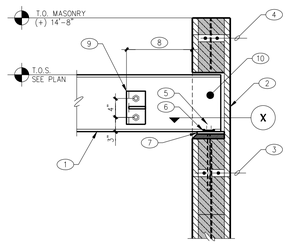

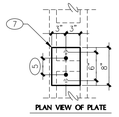

205 STEEL BEAM AT MASONRY WALL
05-SB-MW0101
NO SCALE

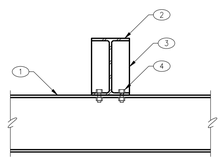

KEY NOTES:

1. MONORAIL BEAM
2. STEEL SUPPORT BEAM
3. ⅜" FITTED STIFFER PLATES EACH SIDE OF BEAM WEB.
4. (4) ¾"ø A325N BOLTS AT STANDARD GAUGES EACH WAY.

203 MONORAIL BEAM AT STEEL SUPPORT BEAM
NO SCALE

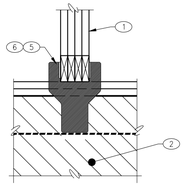

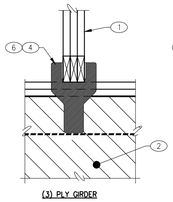

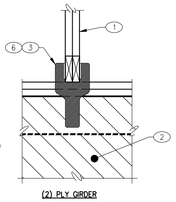

KEY NOTES:

1. PREFAB WOOD GIRDER TRUSS.
2. MASONRY WALL.
3. SIMPSON LGT2 TYPE CONNECTOR W/ (7) ⅛"ø X2½" LONG MASONRY SCREWS.
4. SIMPSON LGT3 TYPE CONNECTOR W/ (4) ⅜"ø X5" LONG MASONRY SCREWS.
5. SIMPSON LGT4-TYPE CONNECTOR W/ (4) ⅜"ø X5" LONG MASONRY SCREWS.
6. AT CORNER HIP JACK TRUSS USE SIMPSON MTSM20 W/ (4) ¼"ø X2½" MASONRY SCREWS.

204 PREFAB WOOD GIRDER TRUSS AT MASONRY WALL
NO SCALE

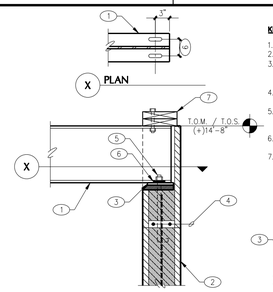

KEY NOTES:

1. STEEL BEAM.
2. MASONRY WALL.
3. 6"X10"X⅜" STEEL BEARING PLATE WITH (2) ¾"ø ANCHOR BOLTS AT 6" O.C. OVER 1"± DRYPACK.
4. BOND BEAM REINFORCING CONTINUOUS FROM BEYOND.
5. (2) ¾"ø X 12" THREADED STUDS WELDED TO BEARING PLATE AT BEAM GAUGE WITH NUT AND WASHER.
6. 2" LONG HORIZONTALLY SLOTTED HOLE ON BEAM GAUGE-EACH SIDE OF WEB.
7. CONTINUOUS TOP PLATE PER DETAIL **204**. BOLT AT ONE SIDE OF FLANGE W/ SINGLE ⅝"ø A307 THRU BOLT. (TRUSS ABOVE NOT SHOWN FOR CLARITY).

201 STEEL BEAM AT MASONRY WALL
05-SB-MW0102
NO SCALE

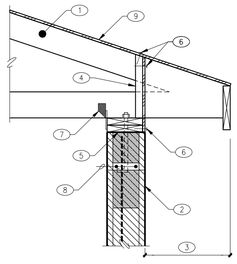

KEY NOTES:

1. PREFAB WOOD TRUSS.
2. MASONRY WALL.
3. TRUSS EXTENSION AS OCCURS – SEE ARCHITECTURAL DRAWINGS.
4. FULL HEIGHT BLOCKING PER TYPICAL DETAIL **T17**.
5. CONTINUOUS PRESSURE TREATED 2X PLATE W/ ⅝"ø A.B. AT 48" O.C.
6. EDGE NAILING.
7. SIMPSON H1 OR H2.5A TYPE CONNECTOR AT EACH TRUSS.
8. CONTINUOUS BOND BEAM PER G.S.N.
9. PLYWOOD SHEATHING.

202 2X PREFAB WOOD TRUSS AT MASONRY WALL
NO SCALE

MASONRY LINTEL (ML) SCHEDULE

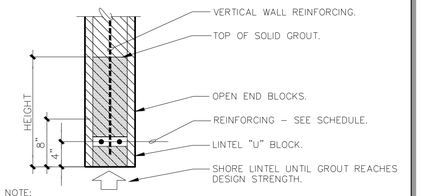

NOTE:
1. VERTICAL REINFORCING TO MATCH AND LAP WALL REINFORCING PER G.S.N.
2. EXTEND GROUT, OPEN END MASONRY UNITS AND REINFORCING 2'-0" PAST EACH JAMB. USE CORNER BARS WHERE 2'-0" CANNOT BE ACHIEVED.

MARK	HEIGHT	REINFORCING
ML1	16"	(2) #5 HORIZONTAL, #4 AT 8" O.C. VERTICAL
ML2	72"	(2) #5 HORIZONTAL, #4 AT 24" O.C. VERTICAL

STEEL BEAM (SB) SCHEDULE

MARK	SIZE	REMARKS
SB1	W12X40	---
SB2	S10X25.4	2 TON CAPACITY MONORAIL

WALL SCHEDULE

NOTE: SEE PLAN SCHEDULES, DETAILS AND GENERAL STRUCTURAL NOTES FOR ADDITIONAL INFORMATION.

AS SEEN ON PLANS	INDICATES–
[dashed]	STRUCTURAL WALL BELOW (BEARING WALL, SHEARWALL, OR EXTERIOR WALL).

ROOF FRAMING PLAN NOTES

1. VERIFY ALL DIMENSIONS WITH ALL ARCHITECTURAL DRAWINGS.
2. ALL SCHEDULED MARK DESIGNATIONS MAY NOT NECESSARILY BE FOUND ON THIS PLAN. SCHEDULES ARE TYPICAL TO THIS PROJECT.
3. SB1, SB2, ETC. – AS SHOWN ON PLAN INDICATES A STEEL BEAM. SEE STEEL BEAM SCHEDULE FOR ADDITIONAL INFORMATION.
4. ML1, ML2, ETC. – AS SHOWN ON PLAN INDICATES A MASONRY LINTEL. SEE MASONRY LINTEL SCHEDULE FOR ADDITIONAL INFORMATION.
5. FOR MISCELLANEOUS LINTELS NOT SHOWN, SEE G.S.N. MASONRY CONTRACTOR SHALL COORDINATE WITH OTHER TRADES FOR SIZES AND LOCATIONS.
6. MCJ – AS SHOWN ON PLAN INDICATES A MASONRY CONTROL JOINT IN A MASONRY WALL. SEE G.S.N. AND TYPICAL DETAIL. JOINTS MAY BE SHOWN, BUT NOT NOTED ON THIS PLAN. SEE FOUNDATION PLAN FOR NOTED LOCATIONS.
7. FOR CLARITY, DETAILS MAY SHOW ONLY ONE SIDE OF FRAMING CONDITION.
8. FOR CLARITY, ALL ROOF OPENINGS MAY NOT BE SHOWN ON THE ROOF FRAMING PLAN. FOR EXACT SIZE, NUMBER AND LOCATION OF OPENINGS, SEE ARCHITECTURAL, MECHANICAL, PLUMBING, AND ELECTRICAL DRAWINGS. FOR FRAMING AT OPENINGS, SEE TYPICAL DETAILS.
9. VERIFY EXACT SIZE AND WEIGHT OF EQUIPMENT ON ROOF WITH MECHANICAL CONTRACTOR.
10. CONTRACTOR TO VERIFY AND BE RESPONSIBLE FOR VARIATIONS IN CONCRETE QUANTITY DUE TO CAMBER, CONSTRUCTION DEAD LOAD DEFLECTIONS AND/OR STRUCTURAL STEEL TOLERANCES OF STEEL BEAMS AND STEEL DECK.
11. GT – AS SHOWN ON PLAN INDICATES A GIRDER TRUSS.
12. HT – AS SHOWN ON PLAN INDICATES A HIP TRUSS.

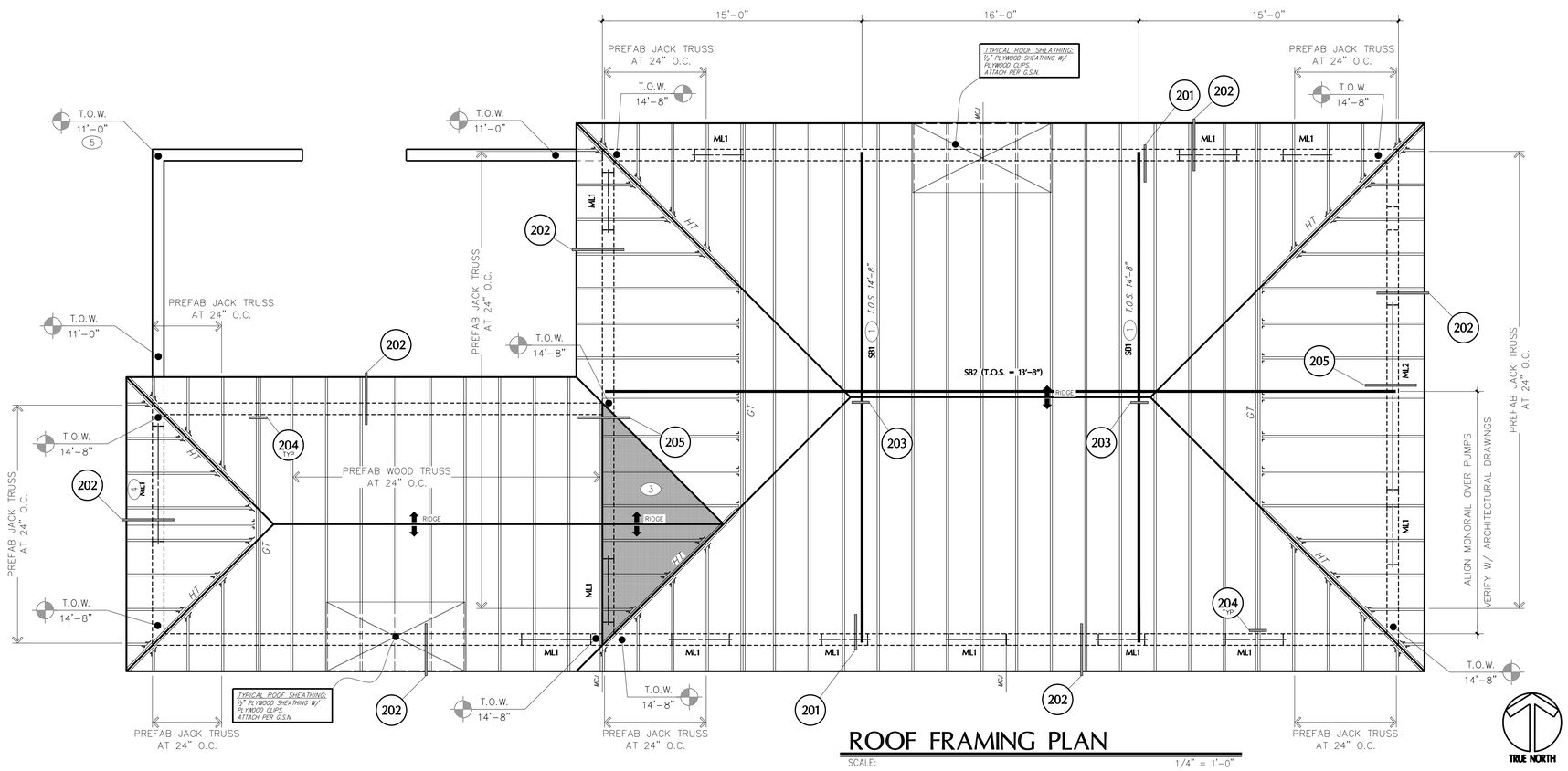

ROOF FRAMING PLAN

SCALE: 1/4" = 1'-0"

TRUE NORTH

PLAN KEYNOTES

1. STEEL SUPPORT BEAM FOR MONO RAIL CRANE SYSTEM. 6,000 LB. MAXIMUM CAPACITY (4,000 LB. LIFTING, 1,000 LB. MONORAIL AND HOIST, 1,000 LB. IMPACT) AT MID-SPAN. DO NOT USE TO SUPPORT ROOF. VERIFY LIFTING LIVE LOAD CAPACITY W/ ARCHITECT. IF DIFFERENT THAN 4000# CONTACT ARCHITECT AND ENGINEER. VERIFY MONORAIL LOCATION WITH ARCHITECTURAL AND MECHANICAL DRAWINGS.
2. NOT USED.
3. OVERBUILD PER TYPICAL T14.
4. ML1 HIGH AND LOW OPENINGS – SEE ARCHITECTURAL DRAWINGS.
5. TOP OF (T.O.) MASONRY (CMU) = 10'-8"
   TOP OF (T.O.) CAP BLOCK = 11'-0".

This drawing is the property of FROST Structural Engineering, Inc. Legally, the drawing can NOT be copied in whole or in pieces. It is only to be used for the project and site specifically identified hereon and is not to be used on any other project. Contractor shall carefully review all dimensions, details, and conditions and report at once any error, inconsistency or omission discovered before construction. The contractor assumes full liability for deviations from the intent of these plans.

JOB NO.: 2019-0120 | PROJECT MANAGER: PETE C. | CAD OPERATOR: MJS

FROST STRUCTURAL ENGINEERING
1678 Oaklawn Drive, Suite C
Prescott, Arizona 86305
phone: 928.776.4757
fax: 928.776.4931
info@frost-structural.com

Brown AND Caldwell
MICHAEL TAYLOR ARCHITECTS, INC.

FOR CONSTRUCTION

Registered Professional Engineer (Structural) CERTIFICATE NO. 27341 RICHARD K. FROST 10.6.23 DATE SIGNED ARIZONA U.S.A.
EXPIRES 9/30/2026

CITY OF PRESCOTT ARIZONA

ZONE 41 PUMP STATION, TANK, AND WATERLINE

REVISIONS

REV	DATE	DESCRIPTION

LINE IS 2 INCHES AT FULL SIZE

DESIGNED: PJC
DRAWN: MJS
CHECKED: RKF
CHECKED:
APPROVED: RKF

FILENAME
S-005.dwg
BC PROJECT NUMBER
152624
CLIENT PROJECT NUMBER
2019-0120

STRUCTURAL

ROOF FRAMING PLAN

DRAWING NUMBER
S-005

SHEET NUMBER
30 OF 84

Path: W:\PROJECTS\AZ10-ARCHIVE\JOBS2019\2019-0120_ZONE 41 PSICAD\1 SHEETS FILENAME: S-005.DWG PLOT DATE: 10/8/2023 8:37 PM CAD USER: RICK FROST

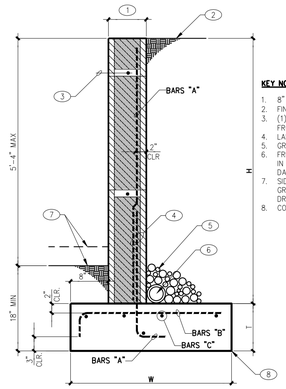

KEY NOTES:

1. 8" MASONRY WALL (SOLID GROUT).
2. FINISH GRADE AS OCCURS.
3. (1) #4 CONTINUOUS, 8" DOWN FROM TOP AND AT MID-HEIGHT.
4. LAP PER G.S.N.
5. GRANULAR BACKFILL.
6. FRENCH DRAIN SYSTEM, WRAPPED IN FABRIC SLEEVE. EXTEND TO DAYLIGHT. GRANULAR BACKFILL.
7. SIDEWALK, PAVEMENT OR FINISH GRADE PER ARCHITECTURAL DRAWINGS.
8. CONCRETE FOOTING.

H	W	T	BARS "A"	BARS "B"	BARS "C"
upto 6'-0"	42"	10"	#4 AT 16" O.C.	#4 AT 12" O.C.	(5) #4 CONT.

106 MASONRY SITE RETAINING WALL
NO SCALE

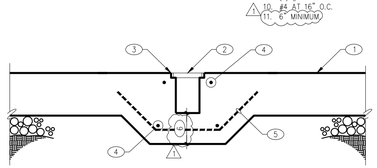

KEY NOTES:

1. MASONRY WALL BEYOND.
2. TURN DOWN CONCRETE SLAB ON GRADE AS SHOWN. NO MASONRY STEMWALL.
3. SIDEWALK, PAVEMENT OR FINISH GRADE PER ARCHITECTURAL DRAWINGS.
4. CONCRETE SLAB IN GRADE, TOOLED EDGE AT OPENING.
5. DEPRESS STEM WALL 8" MIN.
6. MINIMUM FOOTING DEPTH PER G.S.N.
7. AT OPENING: HOOK SLAB REINFORCING AS SHOWN.
8. CONTINUE SAME VERTICAL REINFORING FROM WALL BEYOND.

103 DOOR OPENING AT CONCRETE FOOTING
NO SCALE

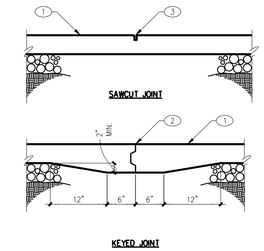

KEY NOTES:

1. CONCRETE SLAB ON GRADE.
2. CONTINUOUS KEYED JOINT.
3. SAWCUT: ⅛" WIDE X ¼" SLAB THICKNESS IN DEPTH. CUT SHALL BE MADE SOON ENOUGH TO PREVENT SHRINKAGE CRACKING, BUT NOT SO SOON AS TO CAUSE SPALLING OF THE CONCRETE WHILE SAWING. WORK MUST BE COMPLETE WITHIN 16 HOURS OF CONCRETE PLACEMENT.

NOTE:
KEYED JOINTS NEED ONLY OCCUR AT EXPOSED EDGES DURING PLACEMENT UNLESS SPECIFICALLY NOTED ON THE PLANS. "TOOL WET JOINT", "ZIP STRIP", ETC. SHALL MATCH SAWCUT REQUIREMENTS.

101 CONTROL JOINTS IN CONCRETE SLAB ON GRADE
03-CS0101
NO SCALE

KEY NOTES:

1. CONCRETE SLAB ON GRADE.
2. CAST IN PLACE TRENCH DRAIN/GRATING PER MECHANICAL DRAWINGS. SLOPE 0.5% DOWN TOWARD SUMP PIT.
8. TOOLED EDGE OR C.I.P PREFAB EDGE FOR GRATING.
9. (1) #4 CONTINUOUS.
10. #4 AT 16" O.C.
11. 6" MINIMUM

107 TRENCH DRAIN AT CONCRETE SLAB ON GRADE
NO SCALE

KEY NOTES:

1. THICKENED SLAB ON GRADE FOR GENERATOR.
2. SOIL IMPROVEMENTS AND COMPACTION PER SOILS REPORT.
3. SLAB ON GRADE.
4. STEEL REINFORCING (2-LAYERS) PER PLAN VIEW.

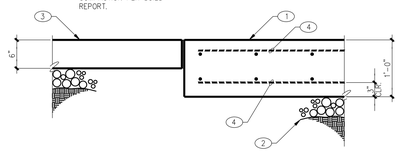

104 THICKENED SLAB ON GRADE AT SLAB ON GRADE
NO SCALE

KEY NOTES:

1. MASONRY WALL.
2. CONCRETE FOOTING.
3. CONTINUOUS ½" THICK FIBER BOARD. HEIGHT TO MATCH SLAB THICKNESS.
4. DOWELS TO MATCH AND LAP VERTICAL WALL REINFORCING PER G.S.N.–ALTERNATE BENDS.
5. CONCRETE SLAB ON GRADE.
6. SIDEWALK, PAVEMENT OR FINISH GRADE PER ARCHITECTURAL DRAWINGS.
7. MINIMUM FOOTING DEPTH PER G.S.N.

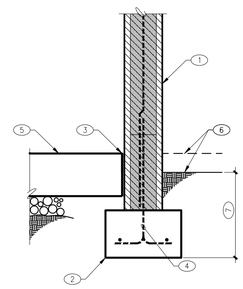

102 MASONRY WALL AT CONCRETE FOOTING
NO SCALE

KEY NOTES:

1. CONCRETE SLAB ON GRADE.
2. (1) #4 HORIZONTAL CONTINUOUS AT 48" O.C.
3. TOOLED EDGE.
4. FINISH GRADE PER ARCHITECTURAL DRAWINGS.
5. TURNDOWN FOOTING – MONO WITH SLAB.
6. #3 L-SHAPED REBAR AT 24" O.C.; EITHER LAP SPLICE 12" WITH SLAB STEEL, OR CONTINUE SLAB STEEL DOWN INTO TURNDOWN FOOTING.

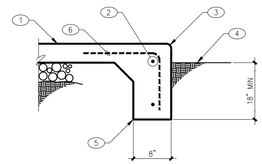

108 CONCRETE TURNDOWN AT EXTERIOR SLAB ON GRADE
03-CS0401
NO SCALE

KEY NOTES:

1. MASONRY WALL.
2. CONCRETE FOOTING.
3. (1) #4 HORIZONTAL CONTINUOUS AT 48" O.C.
4. DOWELS TO MATCH AND LAP VERTICAL WALL REINFORCING PER G.S.N.–ALTERNATE BENDS.
5. CONCRETE SLAB ON GRADE PER FOUNDATION PLAN.
6. SIDEWALK, PAVEMENT OR FINISH GRADE PER ARCHITECTURAL DRAWINGS.
7. (1) #4 CONTINUOUS IN 8" DEEP BOND BEAM.
8. MINIMUM FOOTING DEPTH PER G.S.N.

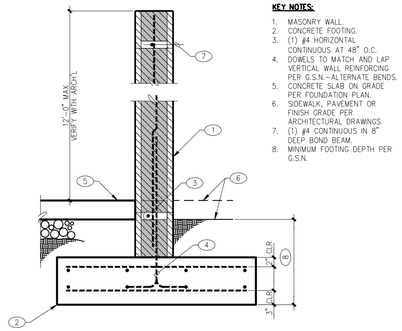

105 MASONRY FENCE AT CONCRETE FOOTING
03-MF-CF0101-1
NO SCALE

KEY NOTES:

1. MASONRY WALL.
2. CONCRETE FOOTING.
3. CONTINUATION OF CONCRETE SLAB ON GRADE TURNDOWN.
4. DOWELS TO MATCH AND LAP VERTICAL WALL REINFORCING PER G.S.N.–ALTERNATE BENDS.
5. CONCRETE SLAB ON GRADE.
6. SIDEWALK, PAVEMENT OR FINISH GRADE PER ARCHITECTURAL DRAWINGS.
7. MINIMUM FOOTING DEPTH PER G.S.N. DEEPEN IN THIS AREA AS NEEDED FOR SUMP PIT DEPTH.
8. TOOLED EDGE OR C.I.P PREFAB EDGE FOR GRATING.
9. STEEL GRATING OVER SUMP PIT PER MECHANICAL DRAWINGS.
10. 6" THICK CONCRETE SLAB BOTTOM OF SUMP PIT. REINFORCE WITH (4) #4 EACH WAY CENTERED. CAN BE POURED MONOLITHIC WITH SLAB ON GRADE POUR.
11. BOTTOM OF SUMP PIT SLAB SAME AS FOOTING. DEEPEN FOOTING IF NEEDED FOR SUMP PIT DEPTH.

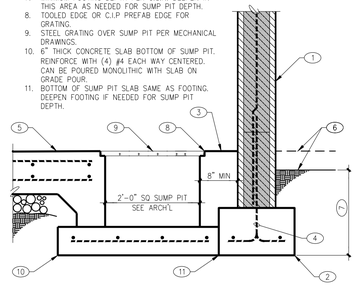

102B SUMP PIT NEAR MASONRY WALL AND CONCRETE FOOTING
NO SCALE

This drawing is the property of FROST Structural Engineering, Inc. Legally, the drawing can NOT be copied in whole or in pieces. It is only to be used for the project and site specifically identified hereon and is not to be used on any other project. Contractor shall carefully review all dimensions, details, and conditions and report at once any error, inconsistency or omission discovered before construction. The contractor assumes full liability for deviations from the intent of these plans.

JOB NO.: 2019-0120 | PROJECT MANAGER: PETE C. | CAD OPERATOR: MJS

FROST STRUCTURAL ENGINEERING
1678 Oaklawn Drive, Suite C
Prescott, Arizona 86305
phone: 928.776.4757
fax: 928.776.4931
info@frost-structural.com

Brown AND Caldwell

MICHAEL TAYLOR ARCHITECTS, INC.

FOR CONSTRUCTION

Registered Professional Engineer (Structural) CERTIFICATE NO. 27341 RICHARD K. FROST DATE SIGNED 10.6.23 ARIZONA U.S.A.

EXPIRES 9/30/2026

CITY OF PRESCOTT ARIZONA

ZONE 41 PUMP STATION, TANK, AND WATERLINE

REVISIONS

REV	DATE	DESCRIPTION
1	10-26-2021	CITY REVIEW COMMENTS

LINE IS 2 INCHES AT FULL SIZE

DESIGNED: PJC
DRAWN: MJS
CHECKED: RKF
CHECKED:
APPROVED: RKF

FILENAME
S-006.dwg
BC PROJECT NUMBER
152624
CLIENT PROJECT NUMBER
2019-0120

STRUCTURAL

FOUNDATION DETAILS 100-SERIES

DRAWING NUMBER
S-006
SHEET NUMBER
31 OF 84

Path: W:\PROJECTS\AZ\0-ARCHIVE\JOBS\2019\2019-0120_ZONE 41 PS\CAD\1 SHEETS FILENAME: S-006.DWG PLOT DATE: 10/8/2023 8:38 PM CAD USER: RICK FROST

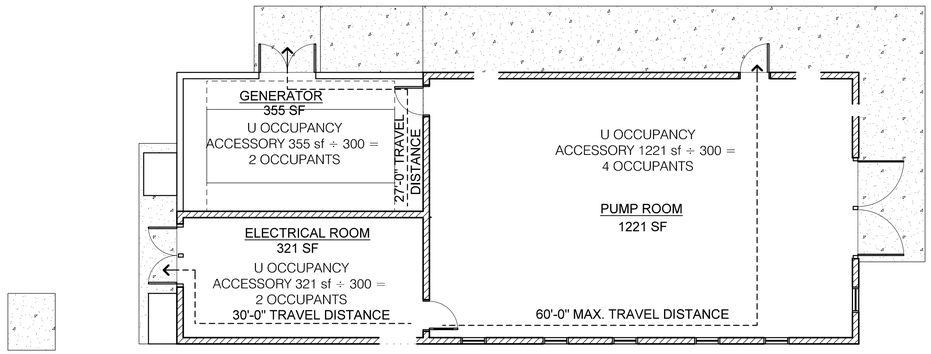

OWNER:
CITY OF PRESCOTT
201 SOUTH CORTEZ STREET
PRESCOTT, ARIZONA 86303-3938

ARCHITECT:
MICHAEL TAYLOR ARCHITECTS, INC.
118 SOUTH PLEASANT STREET
PRESCOTT, ARIZONA 86303

PROJECT ADDRESS:
1821 WILLOW CREEK RD
PRESCOTT, ARIZONA

PARCELL NUMBER: 116-16-102A

SECTION/TOWNSHIP/RANGE
S20-T14N-R02W
S21-T14N-R02W

ACRES: 9.22

ZONED: SF-9

MINIMUM SETBACKS:
FRONT: 25'-0"
SIDE: 7'-0"
REAR: 25'-0"
CORNER: 15'-0"

OCCUPANCY: GROUP U UTILITY AND MISCELLANIOUS USES

TOTAL NUMBER OF OCCUPANTS: 8

CONSTRUCTION TYPE: III-B

ALLOWABLE HEIGHT: 55'-0"

PROPOSED HEIGHT: 24'-6" A.F.F.

ALLOWABLE STORIES: 2

ACTUAL STORIES: 1

ALLOWABLE AREA: 8,500 SF

PROPOSED BUILDING AREA: 1,683 SF
ENCLOSED WALL AREA: 355 SF
TOTAL AREA: 2,038 SF

NON-SEPERATED USE

GOVERNING CODES AND ORDINANCES
2018 INTERNATIONAL BUILDING CODE
2017 NATIONAL ELECTRIC CODE
2018 INTERNATIONAL PLUMBING CODE
2018 INTERNATIONAL MECHANICAL CODE
2018 INTERNATIONAL ENERGY CONSERVATION CODE
2010 ADA STANDARDS FOR ACCESSIBLE DESIGN
2012 IECC ENERGY CODE

OCCUPANT LOAD

ROOM NAME	OCCUPANCY	AREA	LOAD FACTOR	OCCUPANT LOAD
PUMP ROOM	U	1221	300	4
ELECTRICAL	U	355	300	2
GENERATOR	U	321	300	2
TOTAL OCCUPANT LOAD				8

. FLOOR PLAN

SCALE: 1/8" = 1'-0"

Brown AND Caldwell

MICHAEL TAYLOR ARCHITECTS, INC.

FOR CONSTRUCTION

REGISTERED ARCHITECT
CERTIFICATE NO.
24683
MICHAEL G. TAYLOR
ARIZONA U.S.A.
6-14-21

CITY OF PRESCOTT ARIZONA

ZONE 41 PUMP STATION, TANK AND WATERLINE

REVISIONS

REV	DATE	DESCRIPTION
	.	.

2"
AT FULL SIZE

DESIGNED:
DRAWN: JA
CHECKED: MT
CHECKED:
APPROVED:

FILENAME
.

BC PROJECT NUMBER
.

CLIENT PROJECT NUMBER
.

ARCHITECTURAL

CODE SUMMARY

DRAWING NUMBER
CS101

SHEET NUMBER
32 OF 84

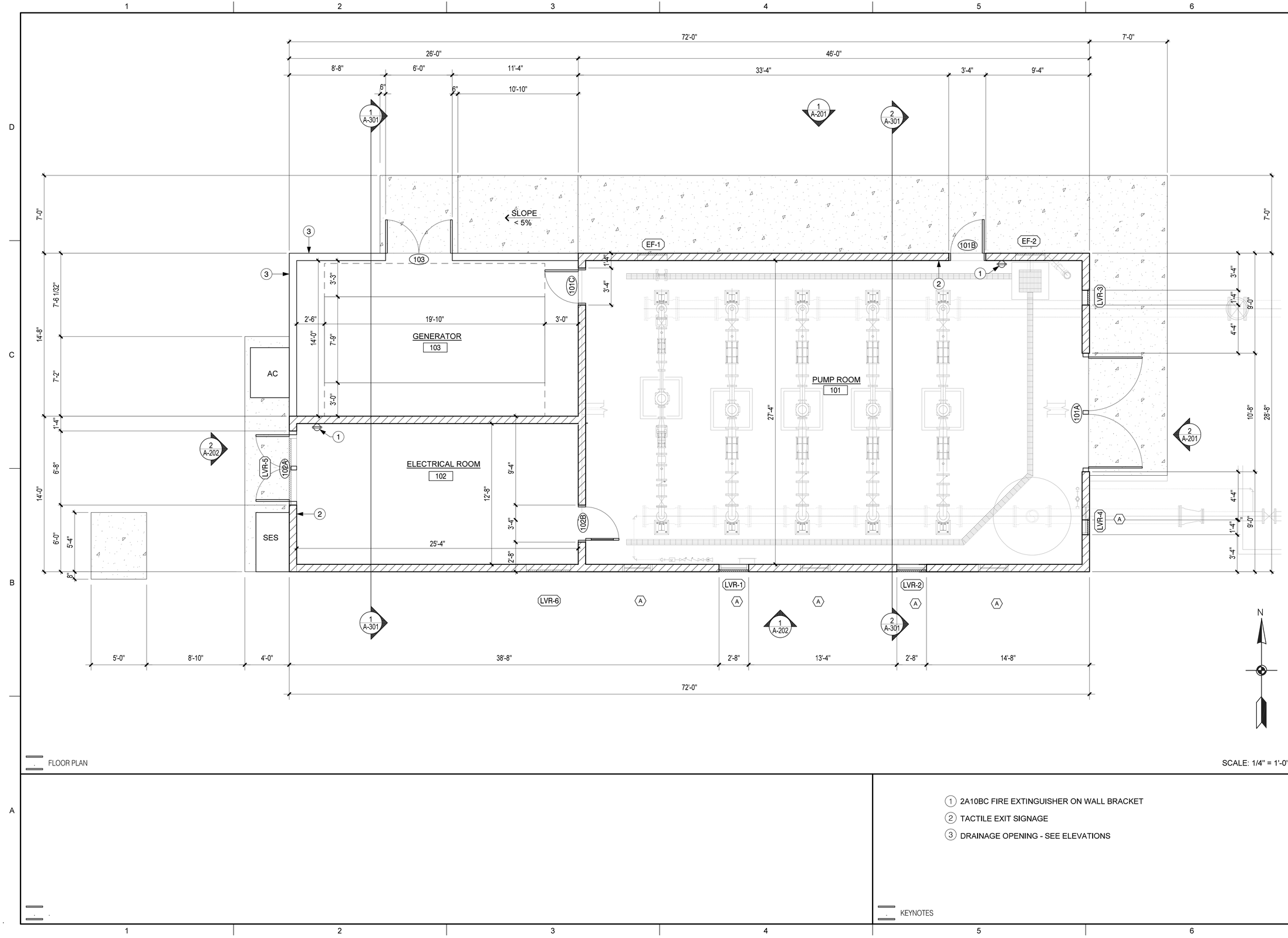

FLOOR PLAN

SCALE: 1/4" = 1'-0"

1. 2A10BC FIRE EXTINGUISHER ON WALL BRACKET
2. TACTILE EXIT SIGNAGE
3. DRAINAGE OPENING - SEE ELEVATIONS

KEYNOTES

Brown AND Caldwell

MICHAEL TAYLOR ARCHITECTS, INC.

FOR CONSTRUCTION

REGISTERED ARCHITECT CERTIFICATE NO. 24683 MICHAEL G. TAYLOR 6.14.21 ARIZONA U.S.A.

CITY OF PRESCOTT ARIZONA

ZONE 41 PUMP STATION, TANK AND WATERLINE

REVISIONS

REV	DATE	DESCRIPTION
	.	.

2" AT FULL SIZE

DESIGNED:
DRAWN: JA
CHECKED: MT
CHECKED:
APPROVED:

FILENAME

BC PROJECT NUMBER

CLIENT PROJECT NUMBER

ARCHITECTURAL

FLOOR PLAN

DRAWING NUMBER

A-101

SHEET NUMBER

33 OF 84

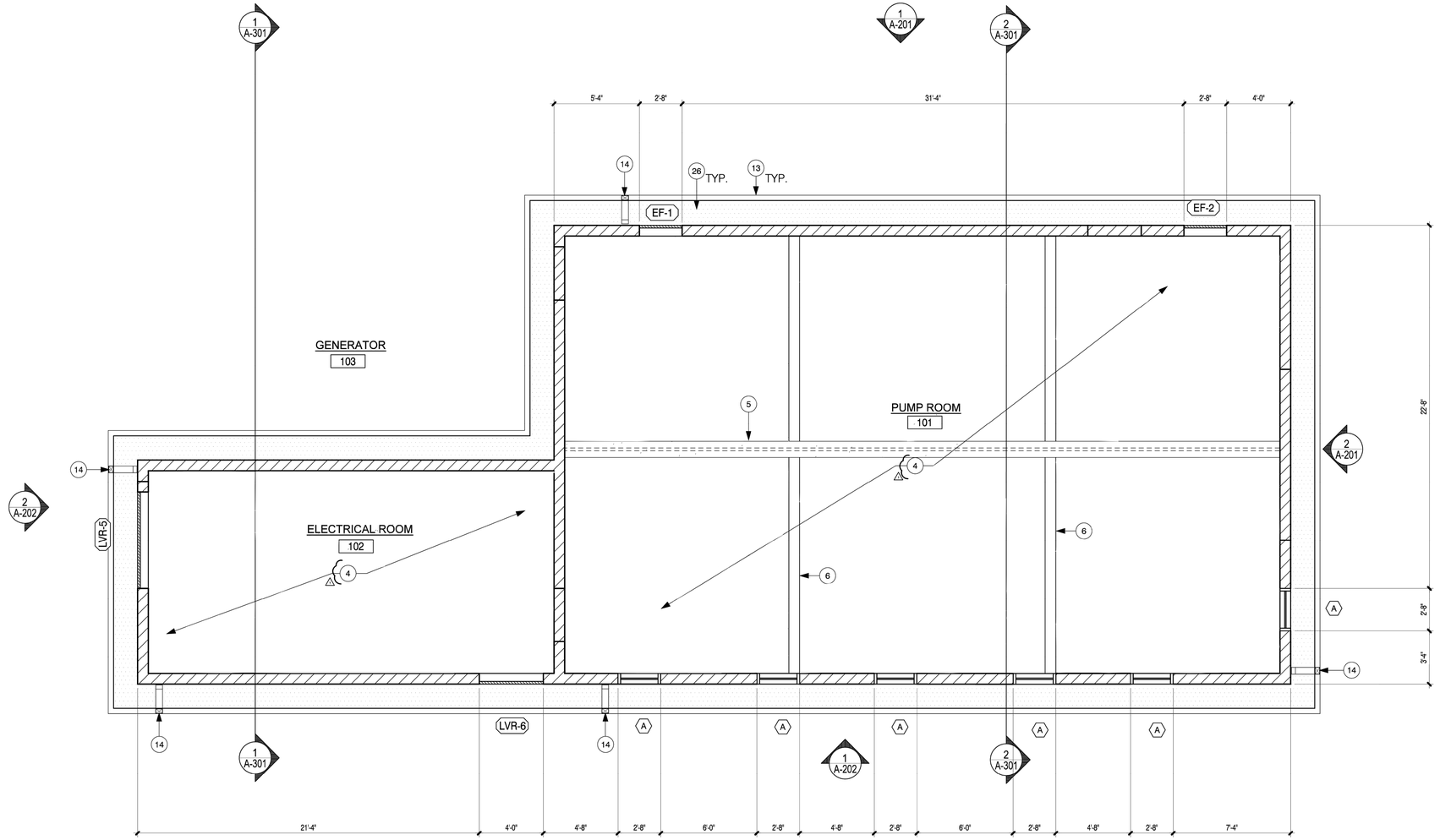

REFLECTED CEILING PLAN

SCALE: 1/4" = 1'-0"

1 2A10BC FIRE EXTINGUISHER ON WALL BRACKET
2 TACTILE EXIT SIGNAGE
3 DRAINAGE OPENING - SEE ELEVATIONS
4 OPEN TO STRUCTURE ABOVE
5 CRANE TRACK
6 CRANE TRACK SUPPORT BEAMS, VERIFY TRUSS LAYOUT WITH BEAM LOCATIONS - SEE STRUCTURAL
7 METAL ROOFING - COLOR TO BE BURNISHED SLATE - SEE SPECS
8 RIDGE
9 HIP
10 VALLEY
11 SNOW BAR SNOW STOP
12 EXISTING GRADE
13 5" ANODIZED METAL RAIN GUTTER - COLOR TO MATCH ROOF
14 4" ANODIZED METAL DOWNSPOUT - COLOR TO MATCH ROOF
15 8x8x16" SPLIT FACE CONCRETE MASONRY UNITS - COLOR TO MATCH CITY OF PRESCOTT BROWN SPEC
16 8x4x16" CAP BLOCK
17 LIGHT FIXTURE - SEE ELECTRICAL
18 REMOVABLE MULLION
19 2X10 WOOD FACIA - WRAP WITH METAL TO MATCH ROOFING
20 SOLID RAISED PANEL METAL GATES - SEE DETAIL 6/A-601
21 FINISHED GRADE - SEE DRAWING C-301
22 CMU BLOCK TURNED SIDEWAYS FOR DRAINAGE
23 CONTINUOUS VENT
24 PREMANUFACTURED ROOF TRUSSES 24" O.C.
25 R-38 SPRAY FOAM INSUALTION
26 HARDIBOARD SOFFIT PANEL
27 FOOTING - SEE STRUCTURAL
28 NOT USED
29 4" CONCRETE SLAB OVER 4" ABC COMPACT - SEE STRUCTURAL
30 12" CONCRETE SLAB OVER 4" ABC COMPACT - SEE STRUCTURAL
31 8" CONCRETE SLAB OVER 4" ABC COMPACT - SEE STRUCTURAL
32 5/8" TYPE 'X' GYPSUM BOARD

Brown AND Caldwell

MICHAEL TAYLOR ARCHITECTS, INC.

FOR CONSTRUCTION

REGISTERED ARCHITECT
CERTIFICATE NO.
24683
MICHAEL G. TAYLOR
ARIZONA U.S.A.
6-14-21

CITY OF PRESCOTT
ARIZONA

ZONE 41 PUMP STATION, TANK AND WATERLINE

REVISIONS		
REV	DATE	DESCRIPTION
1	08.02.22	CEILING CHANGES

2" AT FULL SIZE

DESIGNED:
DRAWN: JA
CHECKED: MT
CHECKED:
APPROVED:

FILENAME

BC PROJECT NUMBER

CLIENT PROJECT NUMBER

ARCHITECTURAL

REFLECTED CEILING PLAN

DRAWING NUMBER

A-102

SHEET NUMBER

34 OF 84

PRESCRIPTIVE DOWNSPOUT & GUTTER CALCULATIONS

MAIN ROOF 1994sf
1994 x 3 x 144 = 86,1408 ÷ 231 = 3729.04 ÷ 60 = 62.15

PER IPC TABLE 1106.3 VERTICAL LEADER SIZING: 3"
PER IPC TABLE 1106.6 HORIZONTAL GUTTER SIZING: 2 1/4" x 3"

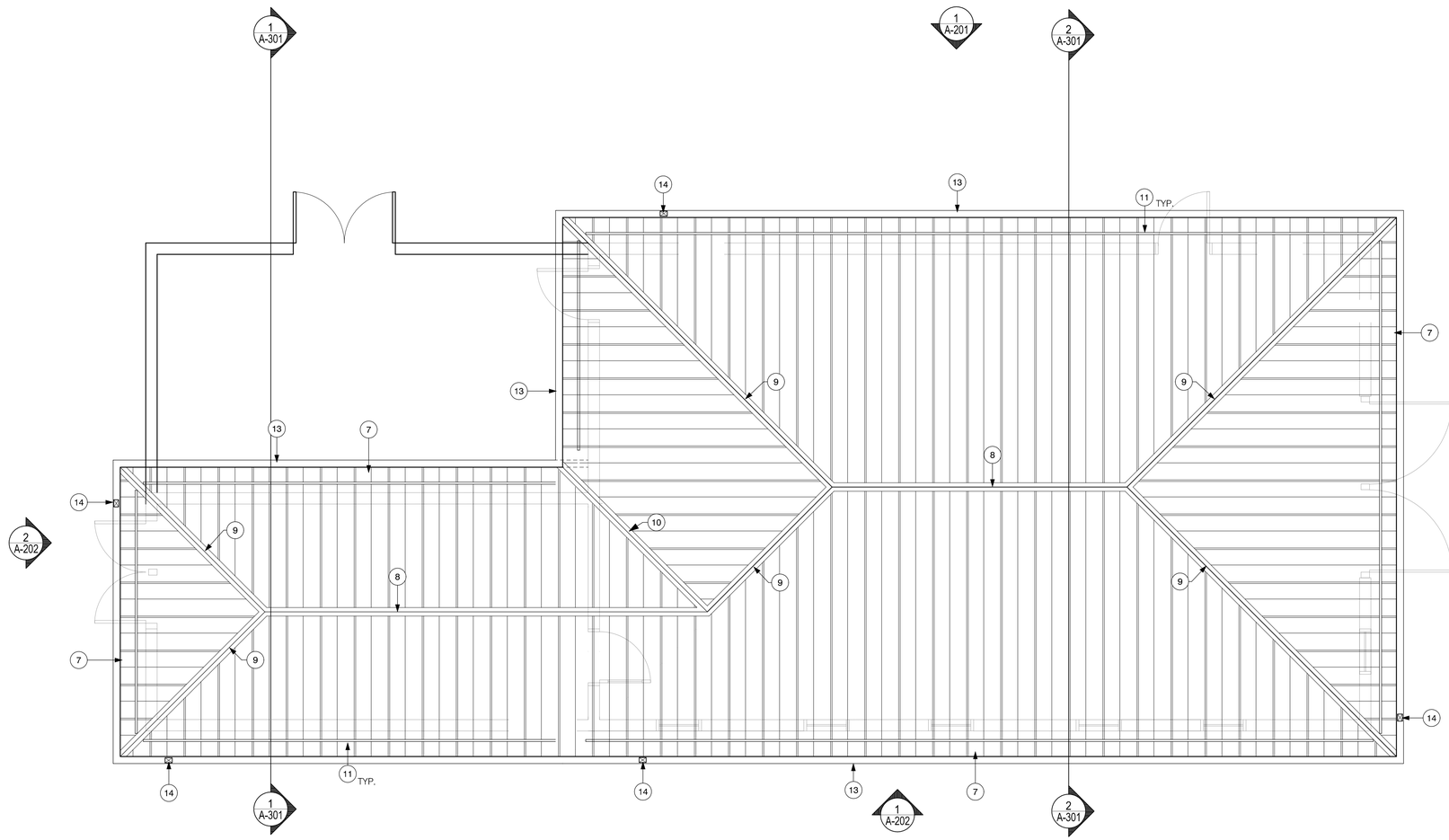

ROOF PLAN

SCALE: 1/4" = 1'-0"

1. 2A10BC FIRE EXTINGUISHER ON WALL BRACKET
2. TACTILE EXIT SIGNAGE
3. DRAINAGE OPENING - SEE ELEVATIONS
4. 5/8" TYPE "X" GYPSUM BOARD CEILING
5. CRANE TRACK
6. CRANE TRACK SUPPORT BEAMS, VERIFY TRUSS LAYOUT WITH BEAM LOCATIONS - SEE STRUCTURAL
7. METAL ROOFING - COLOR TO BE BURNISHED SLATE - SEE SPECS
8. RIDGE
9. HIP
10. VALLEY
11. SNOW BAR SNOW STOP
12. EXISTING GRADE
13. 5" ANODIZED METAL RAIN GUTTER - COLOR TO MATCH ROOF
14. 4" ANODIZED METAL DOWNSPOUT - COLOR TO MATCH ROOF
15. 8x8x16" SPLIT FACE CONCRETE MASONRY UNITS - COLOR TO MATCH CITY OF PRESCOTT BROWN SPEC
16. 8x4x16" CAP BLOCK
17. LIGHT FIXTURE - SEE ELECTRICAL
18. REMOVABLE MULLION
19. 2X10 WOOD FACIA - WRAP WITH METAL TO MATCH ROOFING
20. SOLID RAISED PANEL METAL GATES - SEE DETAIL 6/A-601
21. FINISHED GRADE - SEE DRAWING C-301
22. CMU BLOCK TURNED SIDEWAYS FOR DRAINAGE
23. CONTINUOUS VENT
24. PREMANUFACTURED ROOF TRUSSES 24" O.C.
25. R-38 SPRAY FOAM INSUALTION
26. HARDIBOARD SOFFIT PANEL
27. FOOTING - SEE STRUCTURAL
28. NOT USED
29. 4" CONCRETE SLAB OVER 4" ABC COMPACT - SEE STRUCTURAL
30. 12" CONCRETE SLAB OVER 4" ABC COMPACT - SEE STRUCTURAL
31. 8" CONCRETE SLAB OVER 4" ABC COMPACT - SEE STRUCTURAL
32. 5/8" TYPE 'X' GYPSUM BOARD

Brown AND Caldwell

MICHAEL TAYLOR ARCHITECTS, INC.

FOR CONSTRUCTION

REGISTERED ARCHITECT
CERTIFICATE NO.
24683
MICHAEL G. TAYLOR
ARIZONA U.S.A.
6-14-21

CITY OF PRESCOTT
ARIZONA

ZONE 41 PUMP STATION, TANK AND WATERLINE

REVISIONS

REV	DATE	DESCRIPTION
	.	.

2" AT FULL SIZE

DESIGNED:
DRAWN: JA
CHECKED: MT
CHECKED:
APPROVED:

FILENAME
.

BC PROJECT NUMBER
.

CLIENT PROJECT NUMBER
.

ARCHITECTURAL

ROOF PLAN

DRAWING NUMBER
A-103

SHEET NUMBER
35 OF 84

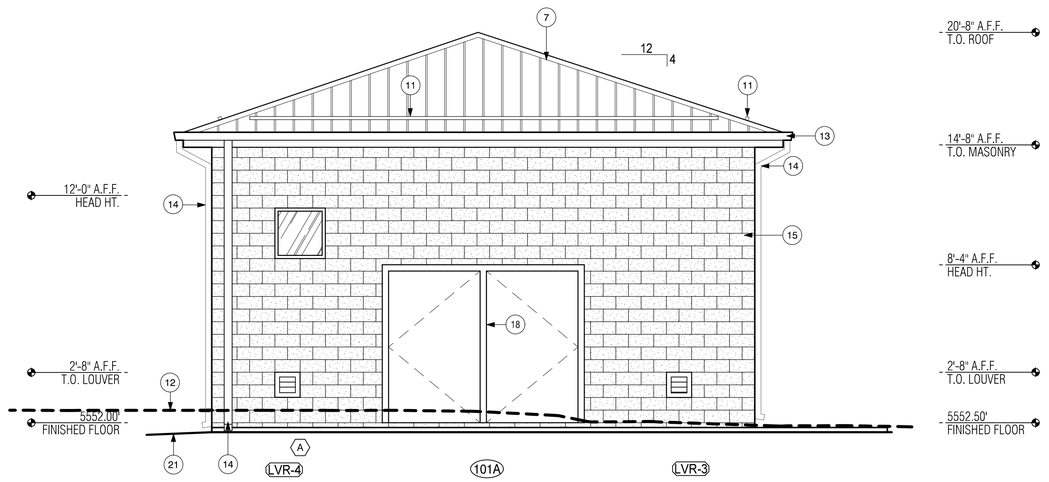

2 ELEVATION - EAST

SCALE: 1/4" = 1'-0"

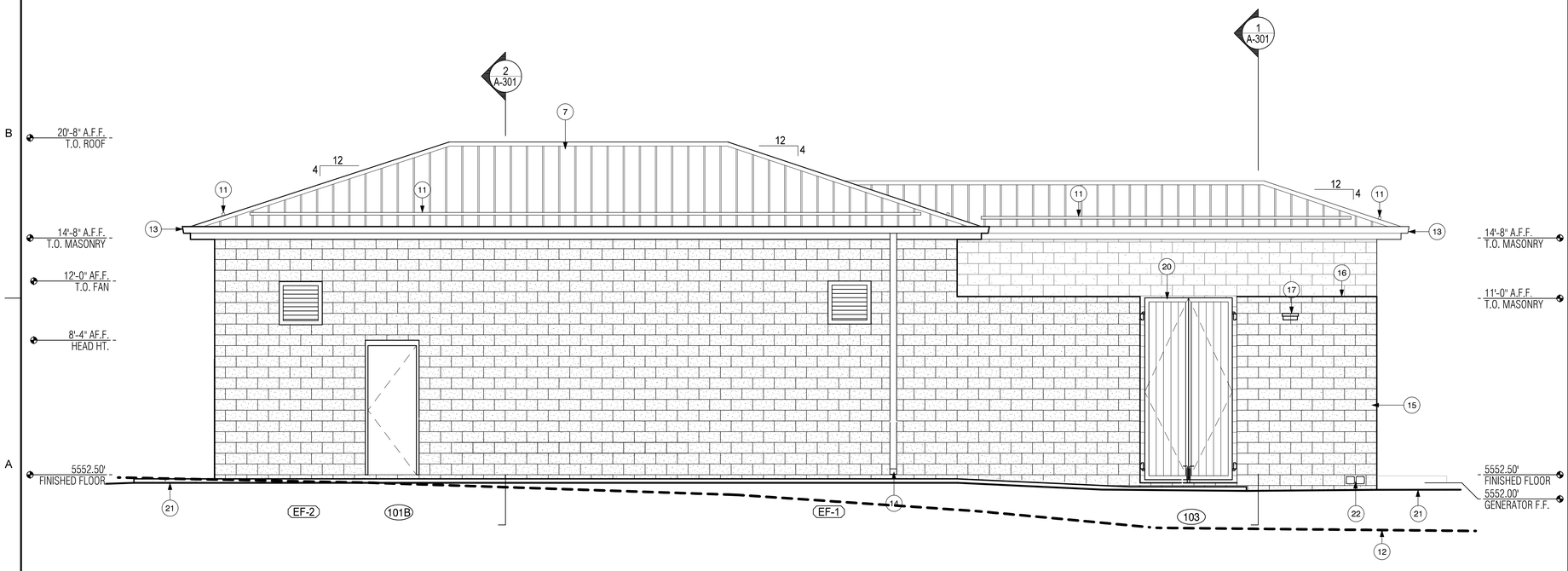

1 ELEVATION - NORTH

SCALE: 1/4" = 1'-0"

VENTILATION SCHEDULE

VENT	SIZE	T.O. LOUVER
LVR-1	32" x 32"	4'-0" A.F.F.
LVR-2	32" x 32"	4'-0" A.F.F.
LVR-3	16" x 16"	2'-8" A.F.F.
LVR-4	16" x 16"	2'-8" A.F.F.
LVR-5	72" x 40"	13'-4" A.F.F.
LVR-6	48" x 32"	12'-0" A.F.F.
EF-1	32" x 32"	12'-0" A.F.F.
EF-2	32" x 32"	12'-0" A.F.F.

NOTE:
LOUVERS TO HAVE GRAVITY DAMPERS

KEYNOTES

1. 2A10BC FIRE EXTINGUISHER ON WALL BRACKET
2. TACTILE EXIT SIGNAGE
3. DRAINAGE OPENING - SEE ELEVATIONS
4. 5/8" TYPE "X" GYPSUM BOARD CEILING
5. CRANE TRACK
6. CRANE TRACK SUPPORT BEAMS, VERIFY TRUSS LAYOUT WITH BEAM LOCATIONS - SEE STRUCTURAL
7. METAL ROOFING - COLOR TO BE BURNISHED SLATE - SEE SPECS
8. RIDGE
9. HIP
10. VALLEY
11. SNOW BAR SNOW STOP
12. EXISTING GRADE
13. 5" ANODIZED METAL RAIN GUTTER - COLOR TO MATCH ROOF
14. 4" ANODIZED METAL DOWNSPOUT - COLOR TO MATCH ROOF
15. 8x8x16" SPLIT FACE CONCRETE MASONRY UNITS - COLOR TO MATCH CITY OF PRESCOTT BROWN SPEC
16. 8x4x16" CAP BLOCK
17. LIGHT FIXTURE - SEE ELECTRICAL
18. REMOVABLE MULLION
19. 2X10 WOOD FACIA - WRAP WITH METAL TO MATCH ROOFING
20. SOLID RAISED PANEL METAL GATES - SEE DETAIL 6/A-601
21. FINISHED GRADE - SEE DRAWING C-301
22. CMU BLOCK TURNED SIDEWAYS FOR DRAINAGE
23. CONTINUOUS VENT
24. PREMANUFACTURED ROOF TRUSSES 24" O.C.
25. R-38 SPRAY FOAM INSUALTION
26. HARDIBOARD SOFFIT PANEL
27. FOOTING - SEE STRUCTURAL
28. NOT USED
29. 4" CONCRETE SLAB OVER 4" ABC COMPACT - SEE STRUCTURAL
30. 12" CONCRETE SLAB OVER 4" ABC COMPACT - SEE STRUCTURAL
31. 8" CONCRETE SLAB OVER 4" ABC COMPACT - SEE STRUCTURAL
32. 5/8" TYPE 'X' GYPSUM BOARD

Brown AND Caldwell

MICHAEL TAYLOR ARCHITECTS, INC.

FOR CONSTRUCTION

REGISTERED ARCHITECT
CERTIFICATE NO.
24683
MICHAEL G. TAYLOR
ARIZONA U.S.A.
6-14-21

CITY OF PRESCOTT
ARIZONA

ZONE 41 PUMP STATION, TANK AND WATERLINE

REVISIONS		
REV	DATE	DESCRIPTION
	.	.

2" AT FULL SIZE

DESIGNED:	
DRAWN:	JA
CHECKED:	MT
CHECKED:	
APPROVED:	

FILENAME

BC PROJECT NUMBER
.

CLIENT PROJECT NUMBER
.

ARCHITECTURAL ELEVATIONS

DRAWING NUMBER
A-201

SHEET NUMBER
36 OF 84

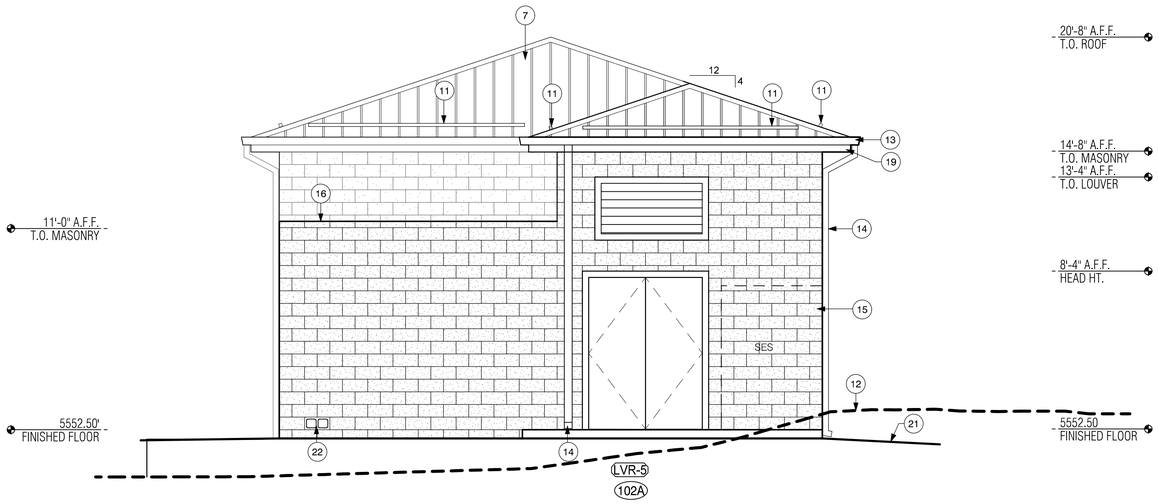

2 ELEVATION - WEST

SCALE: 1/4" = 1'-0"

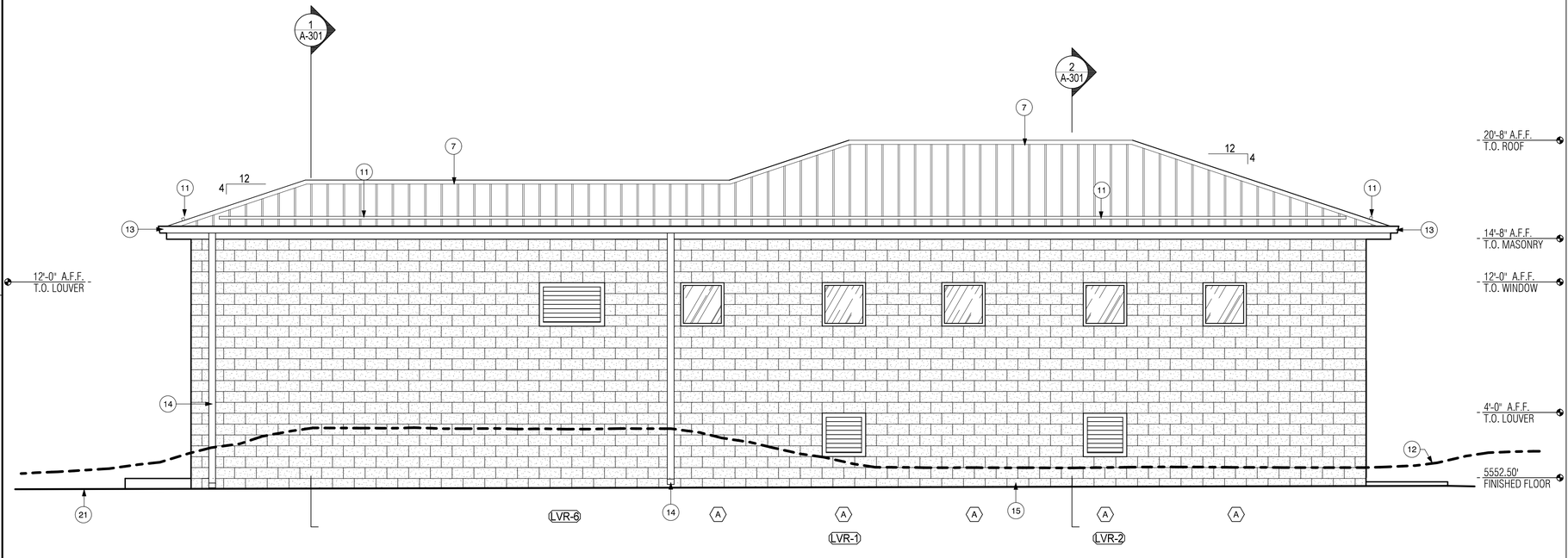

1 ELEVATION - SOUTH

SCALE: 1/4" = 1'-0"

1. 2A10BC FIRE EXTINGUISHER ON WALL BRACKET
2. TACTILE EXIT SIGNAGE
3. DRAINAGE OPENING - SEE ELEVATIONS
4. 5/8" TYPE "X" GYPSUM BOARD CEILING
5. CRANE TRACK
6. CRANE TRACK SUPPORT BEAMS, VERIFY TRUSS LAYOUT WITH BEAM LOCATIONS - SEE STRUCTURAL
7. METAL ROOFING - COLOR TO BE BURNISHED SLATE - SEE SPECS
8. RIDGE
9. HIP
10. VALLEY
11. SNOW BAR SNOW STOP
12. EXISTING GRADE
13. 5" ANODIZED METAL RAIN GUTTER - COLOR TO MATCH ROOF
14. 4" ANODIZED METAL DOWNSPOUT - COLOR TO MATCH ROOF
15. 8x8x16" SPLIT FACE CONCRETE MASONRY UNITS - COLOR TO MATCH CITY OF PRESCOTT BROWN SPEC
16. 8x4x16" CAP BLOCK
17. LIGHT FIXTURE - SEE ELECTRICAL
18. REMOVABLE MULLION
19. 2X10 WOOD FACIA - WRAP WITH METAL TO MATCH ROOFING
20. SOLID RAISED PANEL METAL GATES - SEE DETAIL 6/A-601
21. FINISHED GRADE - SEE DRAWING C-301
22. CMU BLOCK TURNED SIDEWAYS FOR DRAINAGE
23. CONTINUOUS VENT
24. PREMANUFACTURED ROOF TRUSSES 24" O.C.
25. R-38 SPRAY FOAM INSUALTION
26. HARDIBOARD SOFFIT PANEL
27. FOOTING - SEE STRUCTURAL
28. NOT USED
29. 4" CONCRETE SLAB OVER 4" ABC COMPACT - SEE STRUCTURAL
30. 12" CONCRETE SLAB OVER 4" ABC COMPACT - SEE STRUCTURAL
31. 8" CONCRETE SLAB OVER 4" ABC COMPACT - SEE STRUCTURAL
32. 5/8" TYPE 'X' GYPSUM BOARD

Brown AND Caldwell

MICHAEL TAYLOR ARCHITECTS, INC.

FOR CONSTRUCTION

REGISTERED ARCHITECT
CERTIFICATE NO.
24683
MICHAEL G. TAYLOR
STATE OF
ARIZONA U.S.A.
6-14-21

CITY OF PRESCOTT
ARIZONA

ZONE 41 PUMP STATION, TANK AND WATERLINE

REVISIONS		
REV	DATE	DESCRIPTION
	.	.

2"
AT FULL SIZE

DESIGNED:	
DRAWN:	JA
CHECKED:	MT
CHECKED:	
APPROVED:	

FILENAME

BC PROJECT NUMBER
.

CLIENT PROJECT NUMBER
.

ARCHITECTURAL ELEVATIONS

DRAWING NUMBER
A-202

SHEET NUMBER
37 OF 84

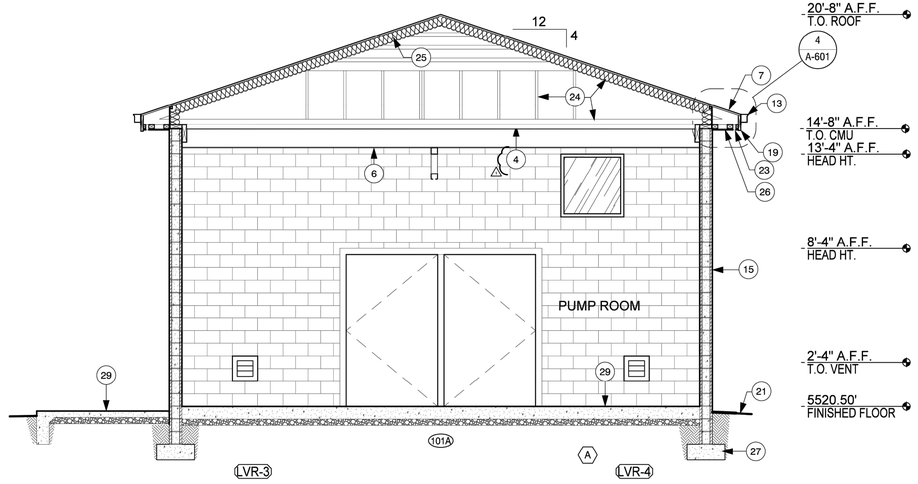

2 SECTION

SCALE: 1/4" = 1'-0"

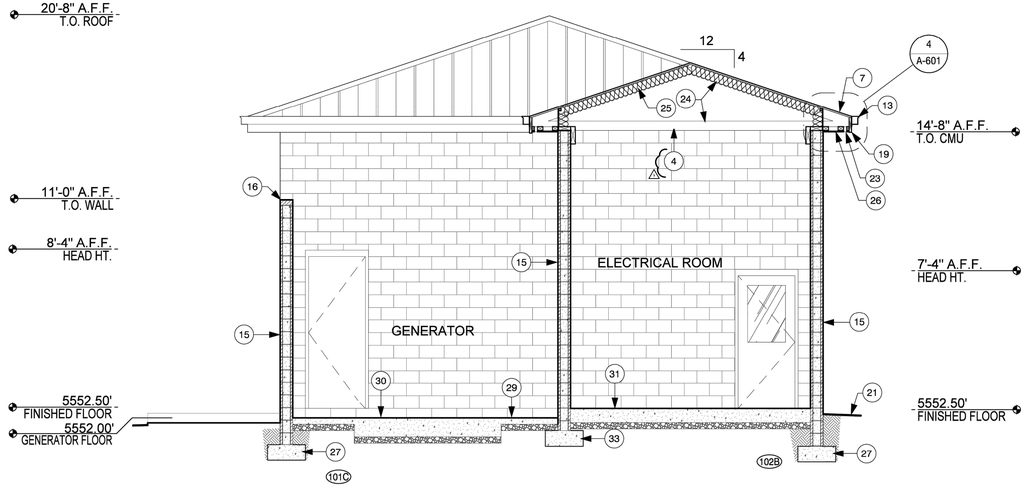

1 SECTION

SCALE: 1/4" = 1'-0"

1 2A10BC FIRE EXTINGUISHER ON WALL BRACKET
2 TACTILE EXIT SIGNAGE
3 DRAINAGE OPENING - SEE ELEVATIONS
4 OPEN TO STRUCTURE ABOVE
5 CRANE TRACK
6 CRANE TRACK SUPPORT BEAMS, VERIFY TRUSS LAYOUT WITH BEAM LOCATIONS - SEE STRUCTURAL
7 METAL ROOFING - COLOR TO BE BURNISHED SLATE - SEE SPECS
8 RIDGE
9 HIP
10 VALLEY
11 SNOW BAR SNOW STOP
12 EXISTING GRADE
13 5" ANODIZED METAL RAIN GUTTER - COLOR TO MATCH ROOF
14 4" ANODIZED METAL DOWNSPOUT - COLOR TO MATCH ROOF
15 8x8x16" SPLIT FACE CONCRETE MASONRY UNITS - COLOR TO MATCH CITY OF PRESCOTT BROWN SPEC
16 8x4x16" CAP BLOCK
17 LIGHT FIXTURE - SEE ELECTRICAL
18 REMOVABLE MULLION
19 2X10 WOOD FACIA - WRAP WITH METAL TO MATCH ROOFING
20 SOLID RAISED PANEL METAL GATES - SEE DETAIL 6/A-601
21 FINISHED GRADE - SEE DRAWING C-301
22 CMU BLOCK TURNED SIDEWAYS FOR DRAINAGE
23 CONTINUOUS VENT
24 PREMANUFACTURED ROOF TRUSSES 24" O.C.
25 R-38 SPRAY FOAM INSUALTION
26 HARDIBOARD SOFFIT PANEL
27 FOOTING - SEE STRUCTURAL
28 NOT USED
29 4" CONCRETE SLAB OVER 4" ABC COMPACT - SEE STRUCTURAL
30 12" CONCRETE SLAB OVER 4" ABC COMPACT - SEE STRUCTURAL
31 8" CONCRETE SLAB OVER 4" ABC COMPACT - SEE STRUCTURAL
32 5/8" TYPE 'X' GYPSUM BOARD

KEYNOTES

Brown AND Caldwell

MICHAEL TAYLOR ARCHITECTS, INC.

FOR CONSTRUCTION

REGISTERED ARCHITECT
CERTIFICATE NO.
24683
MICHAEL G. TAYLOR
STATE OF
ARIZONA, U.S.A.
6-14-22

CITY OF PRESCOTT
ARIZONA

ZONE 41 PUMP STATION, TANK AND WATERLINE

REVISIONS		
REV	DATE	DESCRIPTION
1	08.02.22	CEILING CHANGES

2" AT FULL SIZE

DESIGNED:
DRAWN: JA
CHECKED: MT
CHECKED:
APPROVED:

FILENAME

BC PROJECT NUMBER

CLIENT PROJECT NUMBER
.

ARCHITECTURAL SECTIONS

DRAWING NUMBER
A-301

SHEET NUMBER
38 OF 84

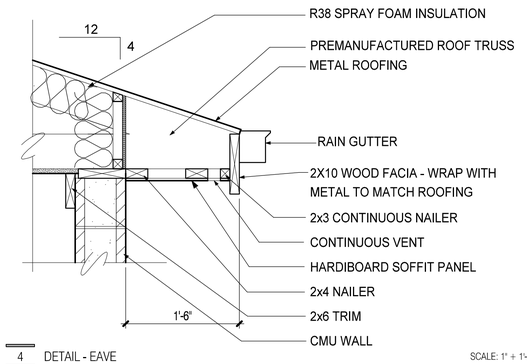

4 DETAIL - EAVE SCALE: 1" = 1'-0"

DOOR, FRAME AND HARDWARE SCHEDULE

	DOOR					FRAME			DETAILS					
DOOR NO.	SIZE	MATERIAL	TYPE	RATING	GLAZING	MATERIAL	FRAME TYPE	FRAME DEPTH	HEAD	JAMB	THRESHOLD	WEATHER STRIP	THRESHOLD	REMARKS
101A	2 - 4'-10" x 10'-0" x 1 3/4"	METAL	A	-	-	HOLLOW METAL	-	-	16/A-601	15/A-601	14/A-601	•	•	1, 3
101B	3'-0" x 8'-0" x 1 3/4"	METAL	C	-	-	HOLLOW METAL	-	-	16/A-601	15/A-601	14/A-601	•	•	1
101C	3'-0" x 8'-0" x 1 3/4"	METAL	C	-	-	HOLLOW METAL	-	-	16/A-601	15/A-601	14/A-601	•	•	1
102A	2 - 3'-0" x 7'-0" x 1 3/4"	METAL	B	-	YES	HOLLOW METAL	-	-	16/A-601	15/A-601	14/A-601	•	•	1, 3
102B	3'-0" x 7'-0" x 1 3/4"	METAL	D	-	YES	HOLLOW METAL			16/A-601	15/A-601				
103	SEE DOOR TYPE "E" ELEV.	METAL	E	-	-	METAL	-	-						

1. ENTRY LOCKSET WITH 3 HEAVY DUTY BUTT HINGES
2. LOCKSET WITH 3 HEAVY DUTY BUTT HINGES
3. REMOVABLE CENTER MULLION

8 DOOR SCHEDULE

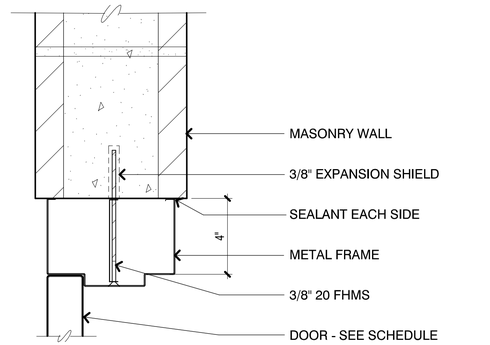

16 DETAIL - HEAD SCALE: 3" = 1'-0"

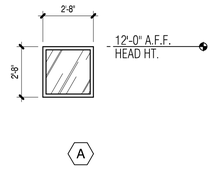

3 WINDOW TYPE ELEVATION

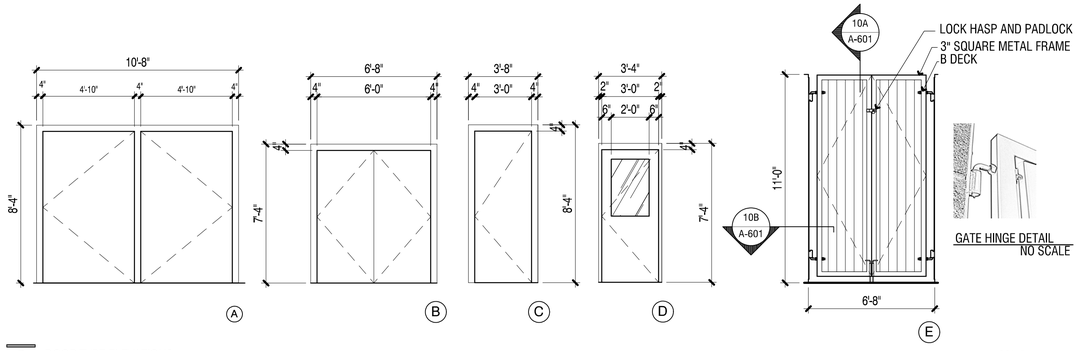

7 DOOR TYPE ELEVATIONS SCALE: 1/4" = 1'-0"

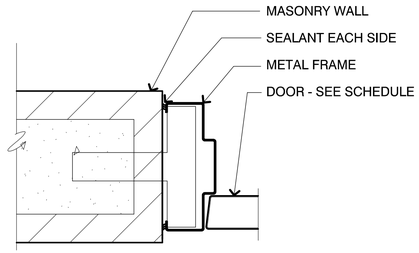

15 DETAIL - JAMB SCALE: 3" = 1'-0"

NOTE: ALL SIGNAGE TO CONFORM TO SECTION 703 OF A.D.A 2010 STANDARDS FOR ACCESSIBLE DESIGN.

1 PROVIDE TACTILE EXIT SIGNAGE AT EXIT DOORS - MOUNT B.O. LETTERING AT 48" A.F.F. AND ADJACENT TO DOOR.



6 DETAIL - SIGNAGE NTS

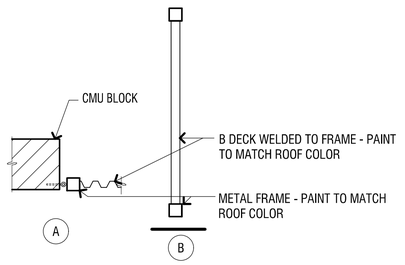

10 DETAILS - GATE SCALE: 1" = 1'-0"

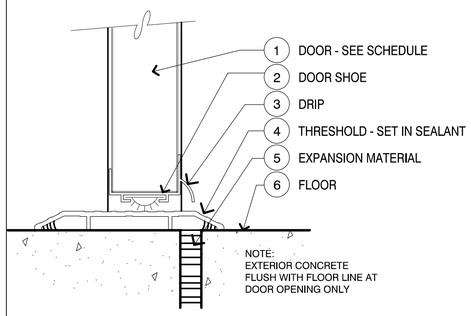

14 DETAIL - SILL SCALE: 3" = 1'-0"

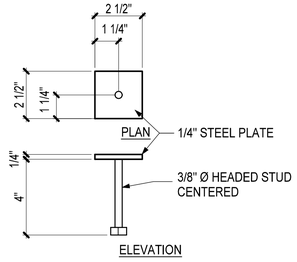

5 DETAIL - WELD PLATE EMBED SCALE: 3" = 1'-0"

1 2 3 4 5 6

Brown AND Caldwell

MICHAEL TAYLOR ARCHITECTS, INC.

FOR CONSTRUCTION

REGISTERED ARCHITECT CERTIFICATE NO. 24683 MICHAEL G. TAYLOR 6.4.21 STATE OF ARIZONA U.S.A.

CITY OF PRESCOTT ARIZONA

ZONE 41 PUMP STATION, TANK AND WATERLINE

REVISIONS		
REV	DATE	DESCRIPTION
	.	.

2" AT FULL SIZE

DESIGNED:	
DRAWN:	JA
CHECKED:	MT
CHECKED:	
APPROVED:	

FILENAME

BC PROJECT NUMBER
.

CLIENT PROJECT NUMBER
.

ARCHITECTURAL

DOOR SCHEDULE AND DETAILS

DRAWING NUMBER
A-601

SHEET NUMBER
39 OF 84

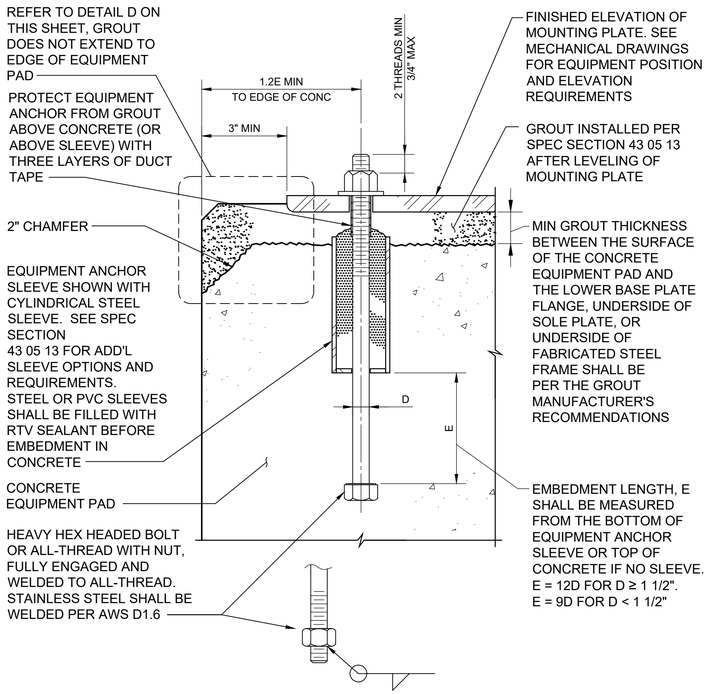

CAST-IN-PLACE EQUIPMENT ANCHOR BOLTS
FOR RIGID EQUIPMENT MOUNTS

DETAIL A VAR M7002

SCALE: NO SCALE

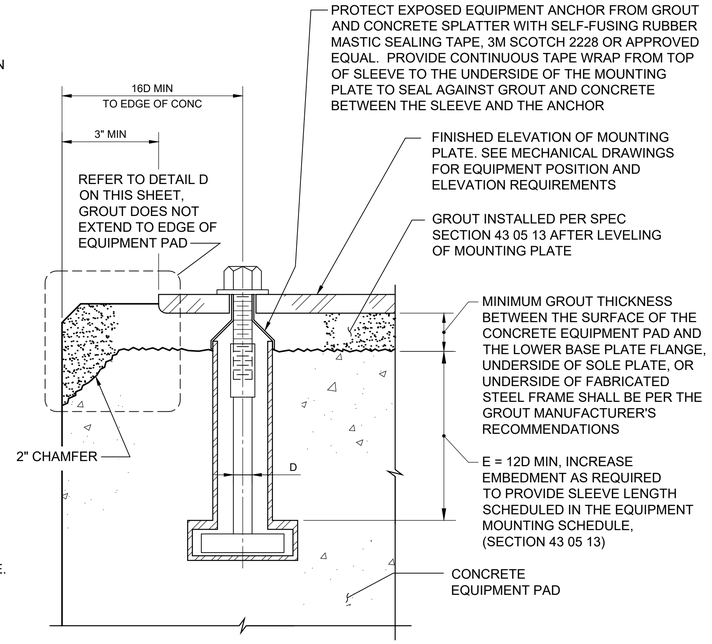

NOTES:
1. ANCHOR PER SECTION 43 05 13.

ADJUSTABLE CANISTER ANCHOR FOR
FOR RIGID EQUIPMENT MOUNTS

DETAIL B VAR M7005

SCALE: NO SCALE

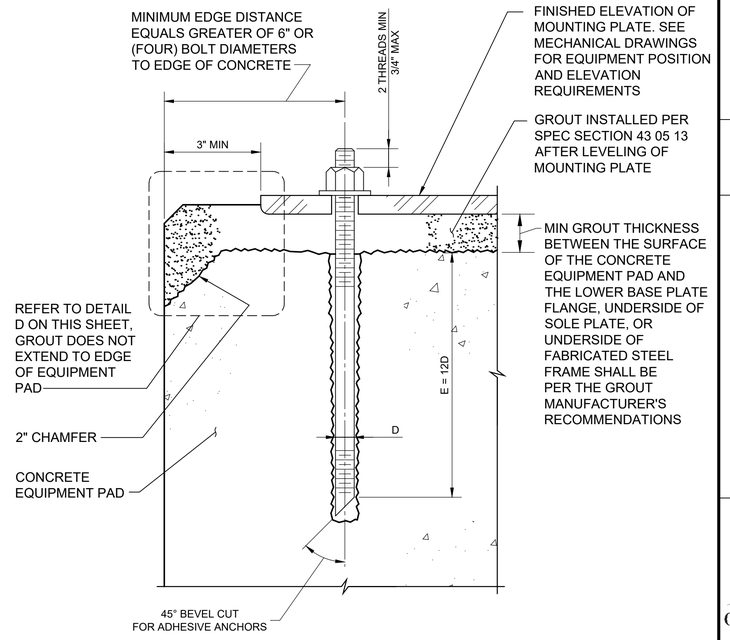

NOTES:
1. ANCHOR PER SECTION 43 05 13.

ADHESIVE ANCHORS FOR
FOR RIGID EQUIPMENT MOUNTS

DETAIL C VAR M7004

SCALE: NO SCALE

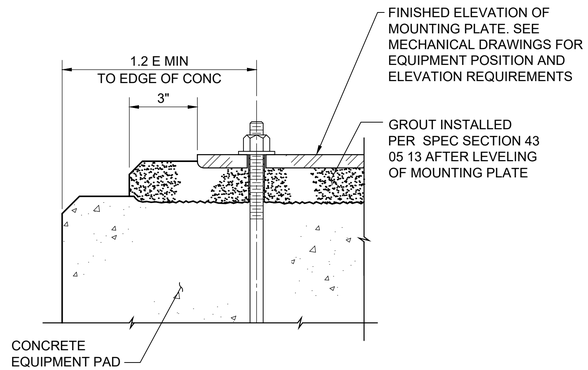

NOTE:
1. "E" EQUALS ANCHOR BOLT EMBEDMENT DEPTH.

EQUIPMENT PAD GROUT EDGE

DETAIL D VAR M7010

SCALE: NO SCALE

GENERAL NOTES:

1. PULL TEST GROUTED EQUIPMENT ANCHOR BOLTS PER SECTION 43 05 13.
2. ALL ANCHORS SHALL BE TYPE 316 SS.
3. ANCHOR BOLTS SHALL BE DESIGNED IN COORDINATION WITH SPECIFICATION SECTION 05 05 20.

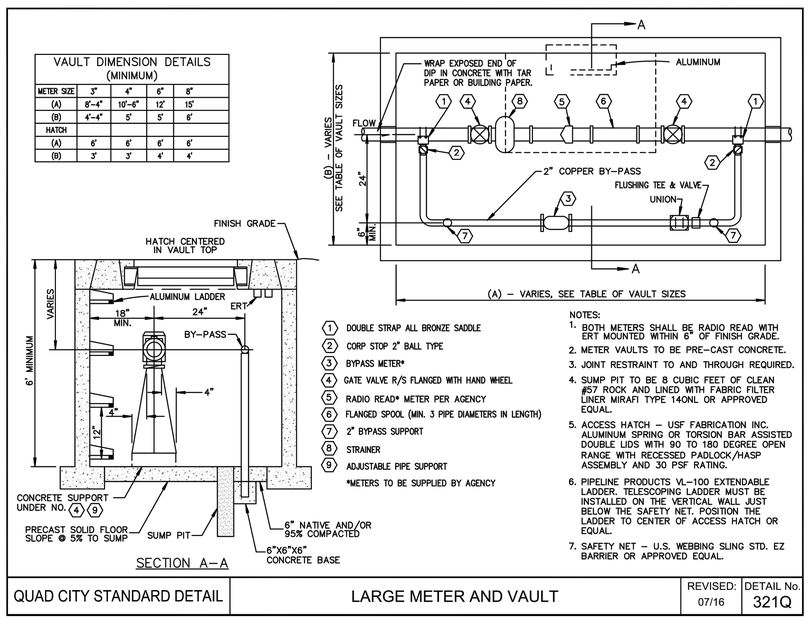

QUAD CITY STANDARD DETAIL	LARGE METER AND VAULT	REVISED: 07/16	DETAIL No. 321Q

Brown AND Caldwell
2 N CENTRAL AVE
SUITE 1600
PHOENIX, AZ 85004

FOR CONSTRUCTION



CITY OF PRESCOTT
ARIZONA

ZONE 41 PUMP STATION, TANK AND PIPELINE

REVISIONS		
REV	DATE	DESCRIPTION

LINE IS 2 INCHES AT FULL SIZE

DESIGNED: MWS
DRAWN: SCP
CHECKED: NW
CHECKED:
APPROVED: TM

FILENAME
152624-M-001.DWG
BC PROJECT NUMBER
152624
CLIENT PROJECT NUMBER
17-009

MECHANICAL

MECHANICAL STANDARD DETAILS 1

DRAWING NUMBER
M-001

SHEET NUMBER
40 OF 84

Path: C:\BCPWD\D474281 FILENAME: 152624-M-001.DWG PLOT DATE: 7/28/2022 3:13 PM CAD USER: ANSON COX
COP1.png

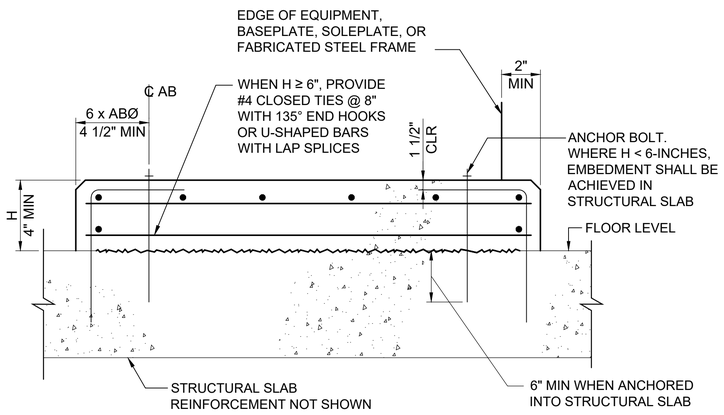

NOTES:
1. CONFORM TO STANDARD DETAIL D ON THIS SHEET.
2. EQUIPMENT PAD PER SECTION 43 05 13.

STATIC/NON-CRITICAL EQUIPMENT PAD

DETAIL A/VAR (M7006)

SCALE: NO SCALE

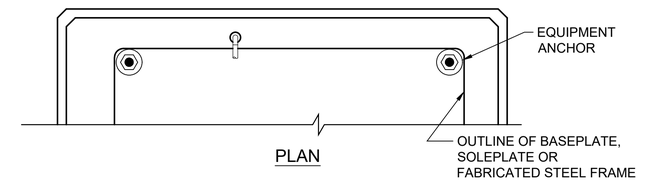

PLAN

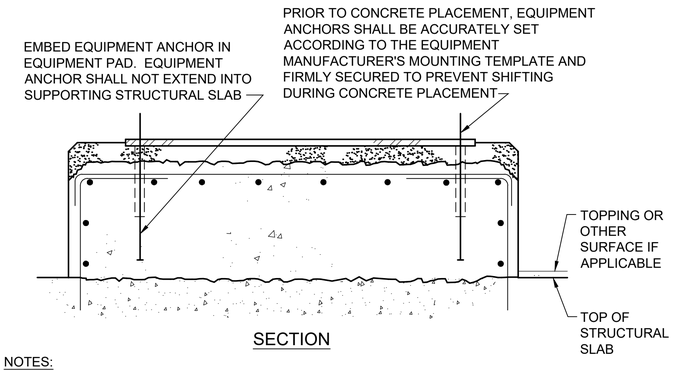

SECTION

NOTES:
1. CONFORM TO STANDARD DETAIL D ON THIS SHEET.
2. EQUIPMENT PAD PER SECTION 43 05 13.

PAD ANCHORED EQUIPMENT PAD

DETAIL B/VAR (M7007)

SCALE: NO SCALE

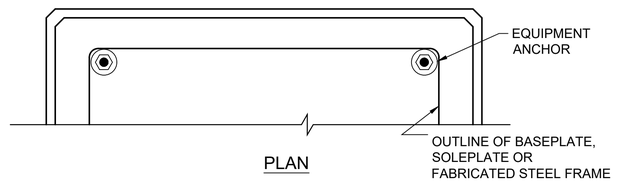

PLAN

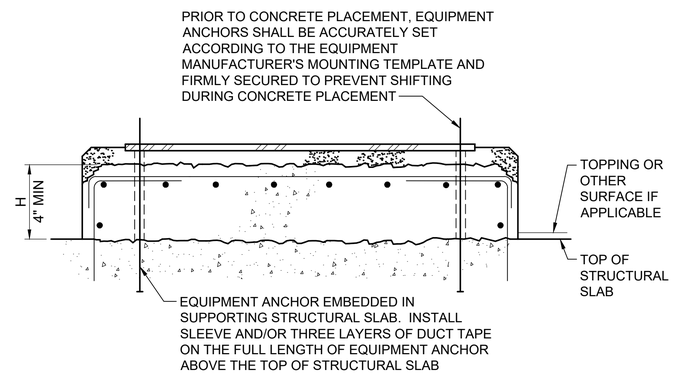

SECTION

NOTES:
1. EQUIPMENT PAD REINFORCEMENT, DRAINAGE, CONDUIT AND OTHER GENERAL REQUIREMENTS FOR EQUIPMENT PADS SHALL CONFORM TO STANDARD DETAIL D ON THIS SHEET.

FOUNDATION ANCHORED EQUIPMENT PAD

DETAIL C/VAR (M7008)

SCALE: NO SCALE

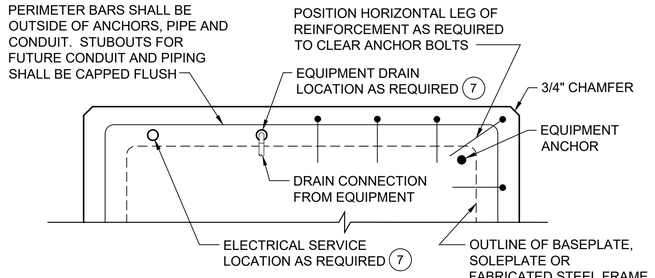

PLAN

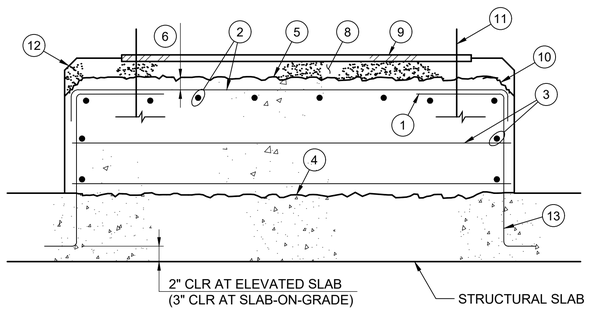

SECTION

GENERAL REQUIREMENTS FOR EQUIPMENT PADS

DETAIL D/VAR (M7009)

SCALE: NO SCALE

KEY NOTES (DETAIL D):

1. #4 @ 12" DOWELS FOR PADS ≤ 12" HIGH (#5 @ 12" FOR PADS > 12" HIGH) WITH 90 DEGREE STANDARD HOOK. PROVIDE 10" EMBEDMENT INTO STRUCTURAL SLAB OR HOOK BARS AT BOTTOM OF SLAB IF SLAB IS LESS THAN 12" THICK.
2. #4 @ 12" EACH WAY. TERMINATE WITH STANDARD HOOKS OR CLASS B LAP SPLICE WITH DOWEL HOOKS.
3. #4 CLOSED TIES @ 8" WITH 135° END HOOKS OR U-SHAPED BARS WITH LAP SPLICES.
4. ROUGHEN SLAB SURFACE TO 1/4" AMPLITUDE. REMOVE ALL LAITANCE AND LOOSE MATERIAL. APPLY BONDING AGENT 30 MINUTES OR LESS BEFORE PLACING CONCRETE. EXTENT OF ROUGHENED AREA SHALL BE 2 INCHES INSIDE THE PERIMETER OF THE EQUIPMENT PAD.
5. AFTER THE CONCRETE IS FULLY CURED, THE TOP OF THE EQUIPMENT PAD SHALL BE ROUGHENED PER SPEC SECTION 43 05 13.
6. MINIMUM 1" CLEAR AFTER ROUGHENING TOP OF EQUIPMENT PAD.
7. THE CONTRACTOR SHALL COORDINATE LOCATION OF ELECTRICAL CONDUIT AND DRAINAGE PIPING PENETRATIONS WITHIN THE EQUIPMENT PAD. ALL PENETRATIONS SHALL STUB-UP ON THE SAME SIDE OF THE EQUIPMENT AS REQUIRED FOR CONNECTION TO EQUIPMENT. EQUIPMENT PAD DRAINS SHALL BE LOCATED AT DRAINAGE CONNECTIONS FROM EQUIPMENT. EQUIPMENT PAD SHALL BE CONFIGURED ACCORDINGLY.
8. EQUIPMENT PAD GROUT. MINIMUM THICKNESS PER GROUT MANUFACTURER'S INSTRUCTIONS.
9. BASEPLATE, SOLEPLATE OR FABRICATED STEEL FRAME.
10. 2-INCH ROUGHENED CHAMFER IN CONCRETE EQUIPMENT PAD ALL AROUND WHERE GROUT EXTENDS TO EDGE OF PAD.
11. PRIOR TO CONCRETE PLACEMENT, EQUIPMENT ANCHORS SHALL BE ACCURATELY SET ACCORDING TO THE EQUIPMENT MANUFACTURER'S MOUNTING TEMPLATE AND FIRMLY SECURED TO PREVENT SHIFTING DURING CONCRETE PLACEMENT. ALL ANCHORS SHALL BE TYPE 316 SS.
12. 3/4-INCH CHAMFER IN EQUIPMENT PAD GROUT ALL AROUND.
13. FOR CONDITION WHERE STRUCTURAL SLAB IS EXISTING, DRILL HOLE AND ADHESIVE GROUT DOWELS A MINIMUM OF 6" INTO THE SLAB FOR #4 DOWELS AND 7 1/2" FOR #5 DOWELS.

Brown AND Caldwell
2 N CENTRAL AVE
SUITE 1600
PHOENIX, AZ 85004

FOR CONSTRUCTION



CITY OF PRESCOTT ARIZONA

ZONE 41 PUMP STATION, TANK AND PIPELINE

REVISIONS

REV	DATE	DESCRIPTION

LINE IS 2 INCHES AT FULL SIZE

DESIGNED:	MWS
DRAWN:	SCP
CHECKED:	NW
CHECKED:	
APPROVED:	TM
FILENAME	152624-M-002.DWG
BC PROJECT NUMBER	152624
CLIENT PROJECT NUMBER	17-009

MECHANICAL

MECHANICAL STANDARD DETAILS 2

DRAWING NUMBER

M-002

SHEET NUMBER

41 OF 84

Path: C:\BCPWD\D0474281 FILENAME: 152624-M-002.DWG PLOT DATE: 8/11/2023 10:31 AM CAD USER: ANSON COX
COP1.png

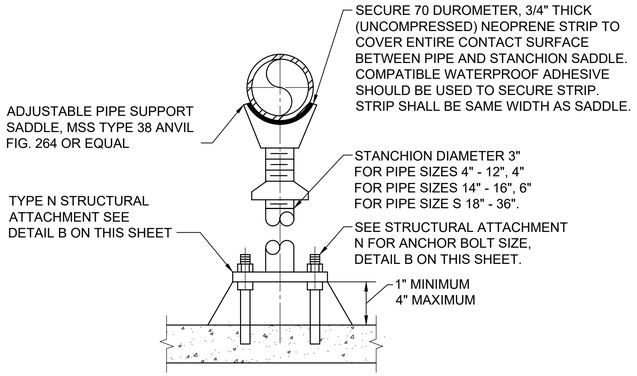

STANCHION PIPE SUPPORT

DETAIL A / TYP

SCALE: NO SCALE

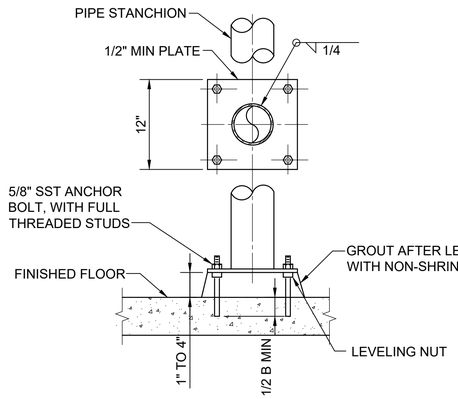

TYPE N STRUCTURAL ATTACHMENT

DETAIL B / TYP

SCALE: NONE

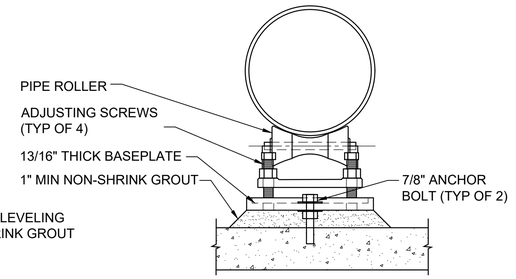

NOTES:
1. SUPPORT SHALL BE ANVIL FIG. 274, OR APPROVED EQUAL.
2. SUPPORT PIPE ROLLER AND STAND SHALL BE HOT-DIP GALVANIZED CAST IRON.
3. CONTRACTOR SHALL ADJUST DEPTH OF GROUT TO ADEQUATELY SUPPORT PIPE.

ADJUSTABLE PIPE ROLLER SUPPORT WITH BASE PLATE

DETAIL C / TYP

SCALE: NONE

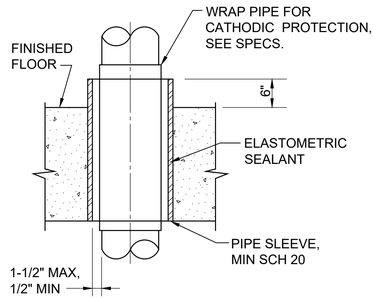

FOR FLOORS

TYPE A PIPE PENETRATION

DETAIL D / TYP

SCALE: NONE

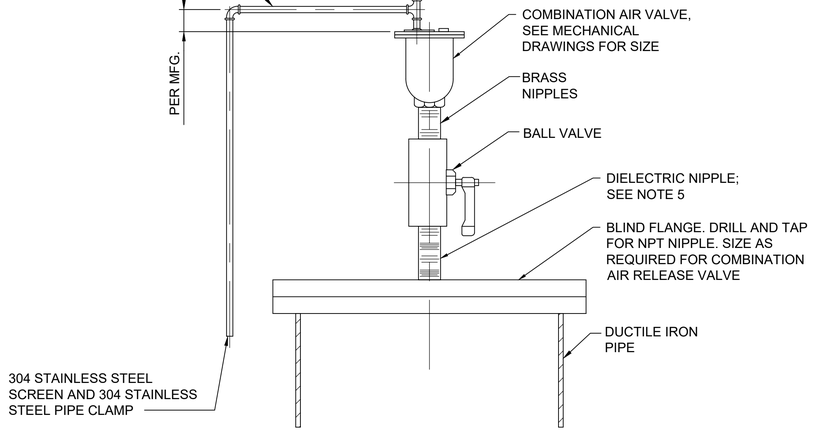

NOTES:
1. ALL PIPING AND VALVES SHALL BE 304 STAINLESS STEEL OR BRASS.
2. PROVIDE DISTANCE BETWEEN VALVE AND BLIND FLANGE TO ALLOW VALVE OPERATOR HANDLE TO TURN FULLY TO OPEN/CLOSE VALVE.
3. PROVIDE SUPPORT FOR DRAIN LINES.
4. VENT DRAIN PIPE SHALL BE 304 STAINLESS STEEL OR BRASS.

COMBINATION AIR AND VACUUM VALVE

DETAIL F / TYP

SCALE: NONE

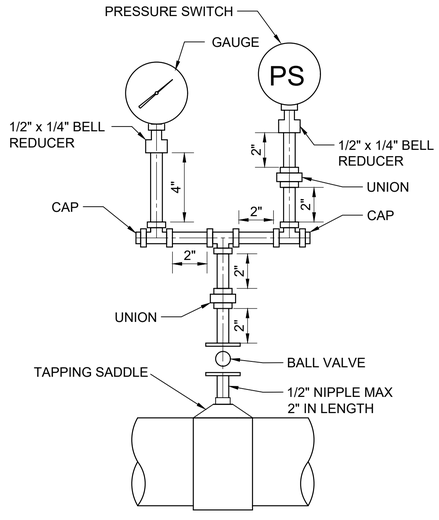

NOTE:
1. ISOLATE DISSIMILAR METALS PER SECTION 40 05 06.16

PRESSURE INSTRUMENT MOUNTING

DETAIL G / TYP

SCALE: NONE

Brown AND Caldwell
2 N CENTRAL AVE
SUITE 1600
PHOENIX, AZ 85004

FOR CONSTRUCTION



CITY OF PRESCOTT
ARIZONA

ZONE 41 PUMP STATION, TANK AND PIPELINE

REVISIONS

REV	DATE	DESCRIPTION

LINE IS 2 INCHES AT FULL SIZE

DESIGNED:	MWS
DRAWN:	SCP
CHECKED:	NW
CHECKED:	
APPROVED:	TM

FILENAME 152624-M-003.DWG
BC PROJECT NUMBER 152624
CLIENT PROJECT NUMBER 17-009

MECHANICAL

MECHANICAL STANDARD DETAILS 3

DRAWING NUMBER
M-003

SHEET NUMBER
42 OF 84

Path: C:\BCPW\D0474281 FILENAME: 152624-M-003.DWG PLOT DATE: 8/11/2023 10:33 AM CAD USER: ANSON COX
COPY.png

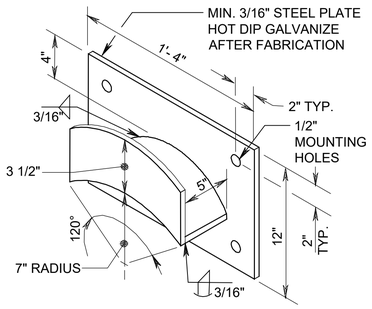

HOSE RACK

DETAIL A TYP

SCALE: NO SCALE

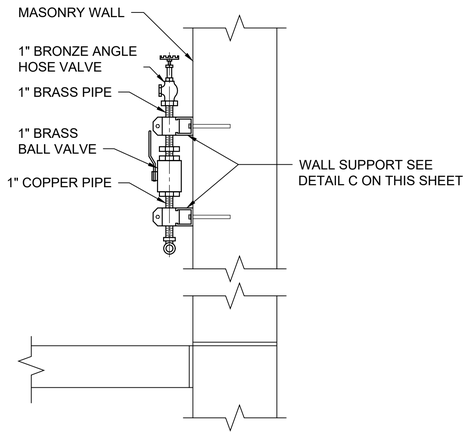

HOSE BIBB

DETAIL B TYP

SCALE: NONE

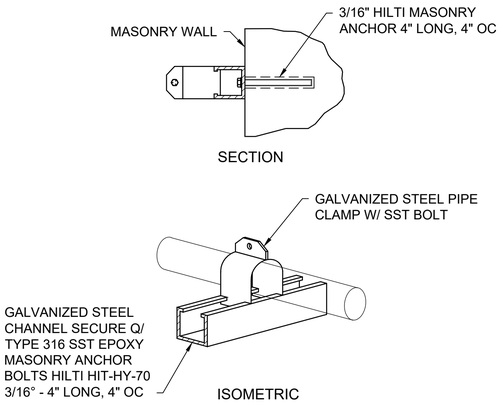

WALL SUPPORT

DETAIL C TYP

SCALE: NONE

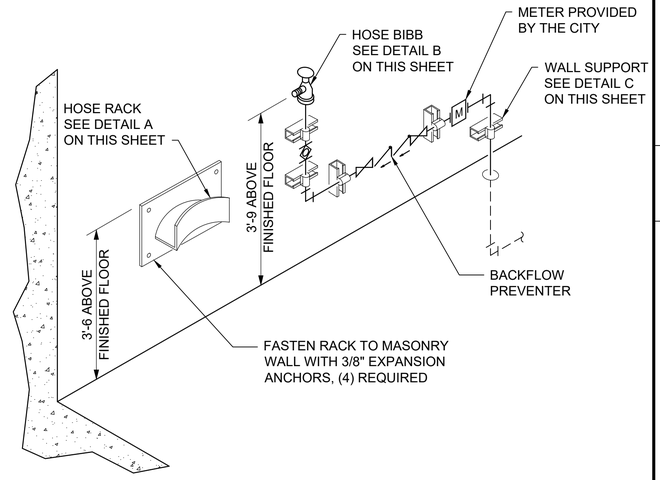

UTILITY STATION TYPE A
WALL MOUNTED

DETAIL D TYP

SCALE: NONE

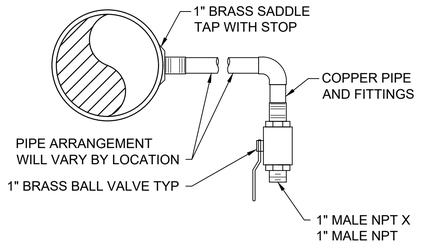

NOTES:
1. ALL PIPING SHALL BE INSULATED WITH FOAM INSULATION AND WRAPPED WITH ALUMINUM TAPE

SAMPLE TAP

DETAIL E TYP

SCALE: NO SCALE

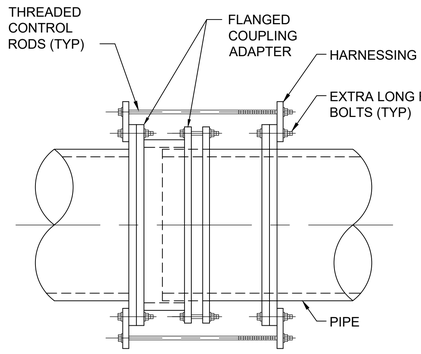

RESTRAINED FLANGED
COUPLING ADAPTER

DETAIL F TYP

SCALE: NO SCALE

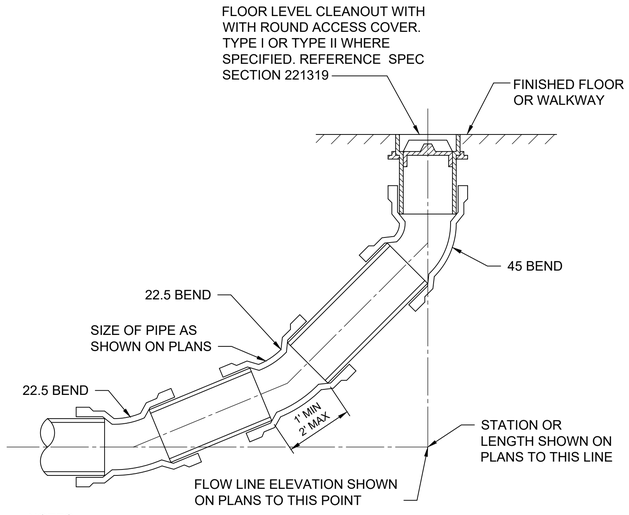

NOTES:

TYPE I CLEANOUT IS FOR FINISHED CONCRETE FLOORS.

TYPE II CLEANOUT IS FOR CONCRETE FLOORS WITH FLOOR COVERING.

CLEANOUT

DETAIL G TYP

SCALE: NO SCALE

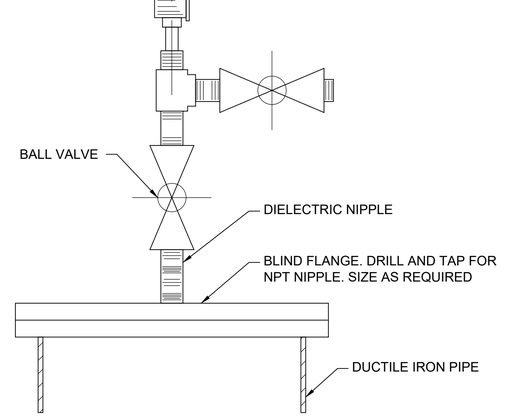

NOTES:
1. ALL PIPING MATERIAL AND VALVES SHALL BE 304 STAINLESS STEEL OR BRASS.
2. PROVIDE DISTANCE BETWEEN VALVE AND BLIND FLANGE TO ALLOW VALVE OPERATOR HANDLE TO TURN FULLY TO OPEN/CLOSE VALVE.

PRESSURE INSTRUMENT
MOUNTING TO BLIND FLANGE

DETAIL H TYP

SCALE: NO SCALE

Brown AND Caldwell
2 N CENTRAL AVE
SUITE 1600
PHOENIX, AZ 85004

FOR CONSTRUCTION



CITY OF PRESCOTT
ARIZONA

ZONE 41 PUMP STATION, TANK AND PIPELINE

REVISIONS

REV	DATE	DESCRIPTION

LINE IS 2 INCHES AT FULL SIZE

DESIGNED: MWS
DRAWN: SCP
CHECKED: NW
CHECKED:
APPROVED: TM

FILENAME
152624-M-004.DWG

BC PROJECT NUMBER
152624

CLIENT PROJECT NUMBER
17-009

MECHANICAL

MECHANICAL STANDARD DETAILS 4

DRAWING NUMBER
M-004

SHEET NUMBER
43 OF 84

Path: C:\BCPWD\D0474281 FILENAME: 152624-M-004.DWG PLOT DATE: 7/28/2022 3:23 PM CAD USER: ANSON COX
COPY.png

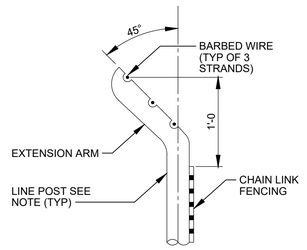

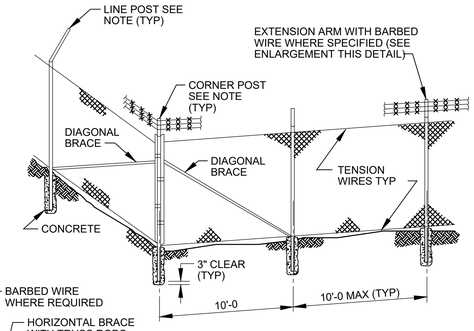

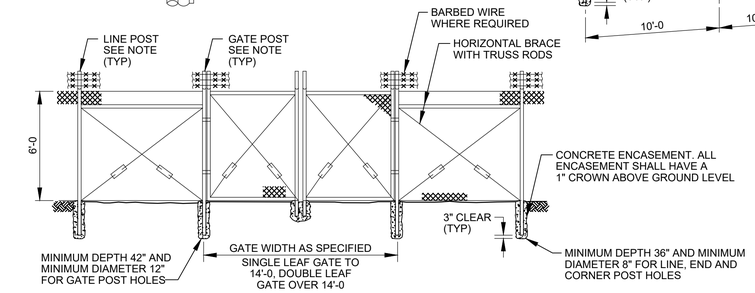

NOTE:
PROVIDE POST CAP
WHERE ENTENSION ARM
WITH BARBED WIRE IS
NOT SPECIFIED.

CHAIN LINK FENCE AND GATE

DETAIL A/TYP

SCALE: NO SCALE

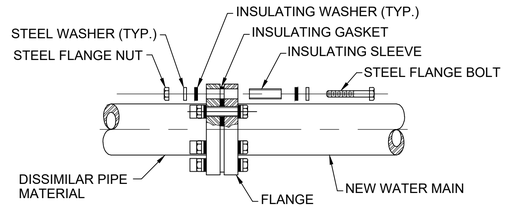

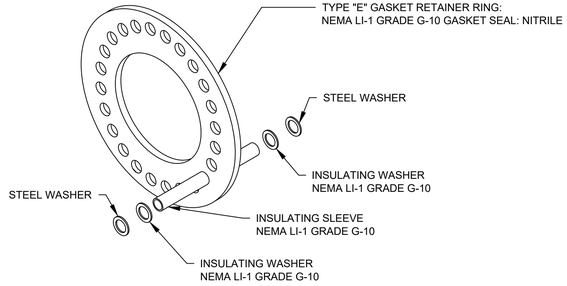

FLANGE INSULATING KIT

DETAIL B/TYP

SCALE: NO SCALE

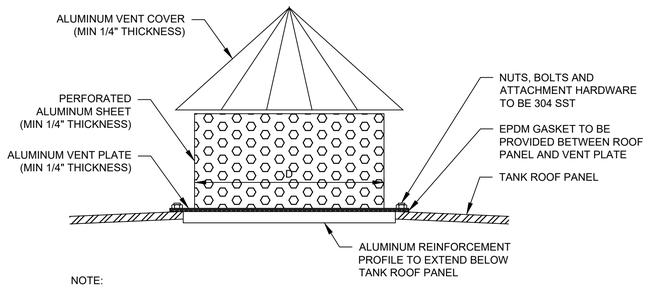

NOTE:

1. ALUMINUM CONNECTIONS TO BE WELDED
2. PROVIDED THICKNESSES ARE MINIMUM. DESIGN OF TANK VENT SHALL BE IN ACCORDANCE WITH REQUIREMENTS OF SPECIFICATION SECTION 33 16 13.13. ALL THICKNESSES SHALL ALLOW FOR STRUCTURAL LOADS IMPOSED ON TANK.
3. DIAMETER "D" OF TANK VENT SHALL BE PER TANK MANUFACTURER.

TANK AIR VENT

DETAIL C/TYP

SCALE: NO SCALE

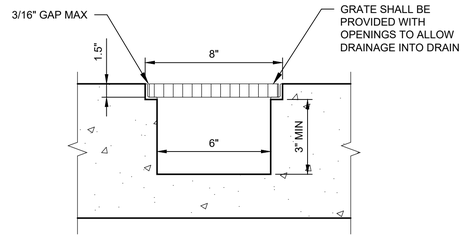

NOTE:

1. GRATE SHALL BE TYPE AX AND GRATE OPENINGS SHALL BE TYPE A BY NEENAH FOUNDRY OR APPROVED EQUAL.

HEAVY DUTY TRENCH DRAIN

DETAIL D/TYP

SCALE: NO SCALE

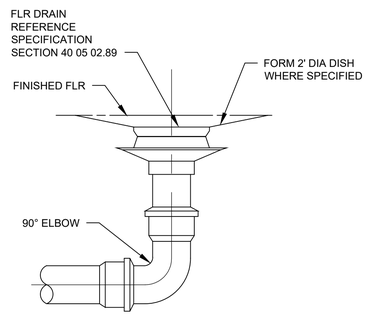

TYPE II FLOOR DRAIN

DETAIL E/TYP

SCALE: NO SCALE

Brown AND Caldwell
2 N CENTRAL AVE
SUITE 1600
PHOENIX, AZ 85004

FOR CONSTRUCTION



CITY OF PRESCOTT
ARIZONA

ZONE 41 PUMP STATION, TANK AND PIPELINE

REVISIONS

REV	DATE	DESCRIPTION

LINE IS 2 INCHES
AT FULL SIZE

DESIGNED:	MWS
DRAWN:	SCP
CHECKED:	NW
CHECKED:	
APPROVED:	TM

FILENAME
152624-M-005.DWG

BC PROJECT NUMBER
152624

CLIENT PROJECT NUMBER
17-009

MECHANICAL

MECHANICAL STANDARD DETAILS 5

DRAWING NUMBER

M-005

SHEET NUMBER
44 OF 84

Path: C:\BCPW\D0474281 FILENAME: 152624-M-005.DWG PLOT DATE: 8/11/2023 10:35 AM CAD USER: ANSON COX
COP1.png

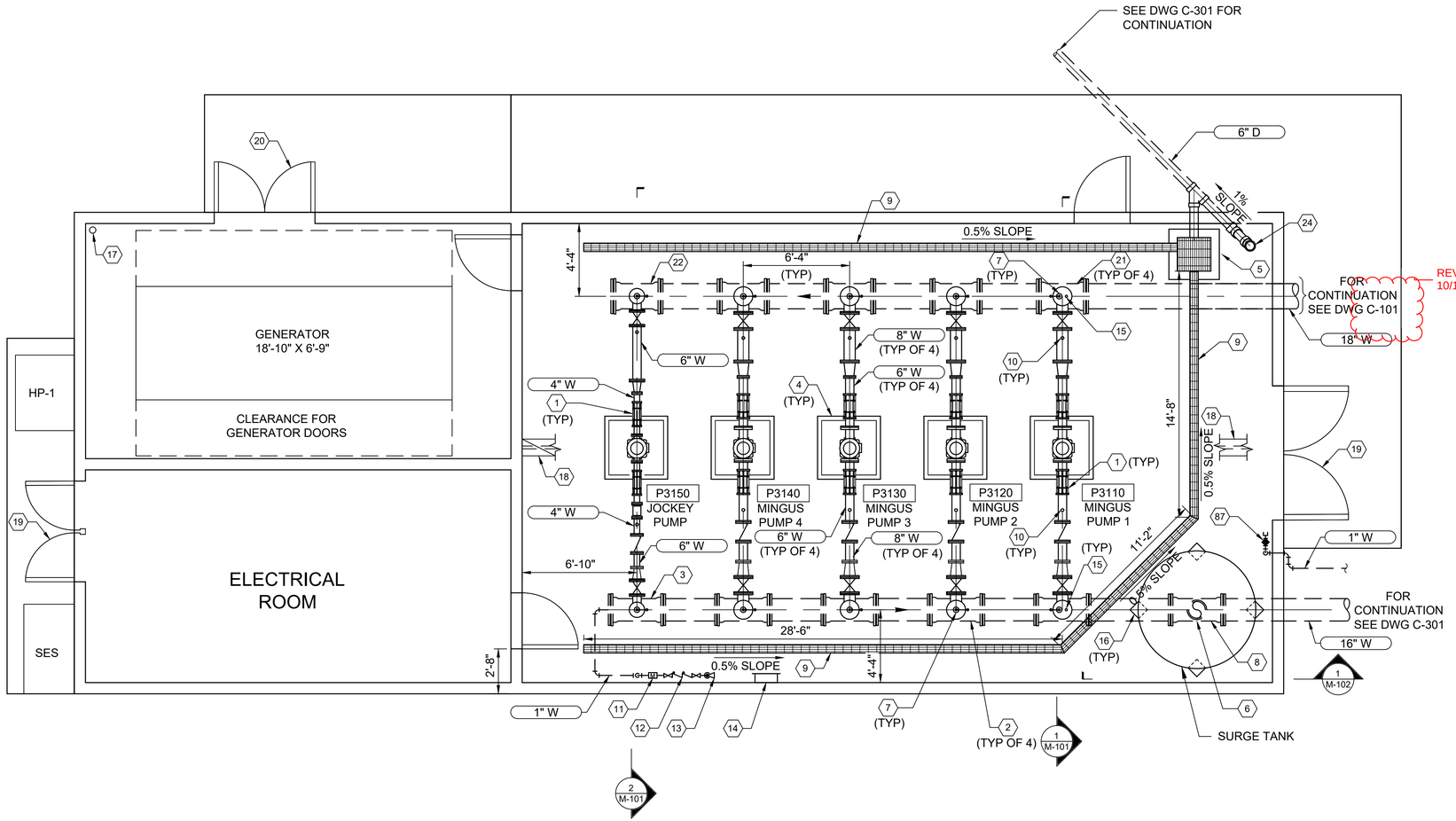

KEY NOTES

1. EQUIPMENT CONNECTION FITTING, TYPICAL ON SUCTION AND DISCHARGE OF EACH PUMP
2. 16" x 8" TEE
3. 16" x 6" TEE
4. EQUIPMENT PAD PER DETAIL B ON DWG M-002
5. 2' X 2' CONCRETE SUMP WITH CAST IRON GRATE AND PUMP STATION FLOOD SWITCH PER DWG E-401. BOTTOM OF SUMP SLAB TO MATCH THE BOTTOM OF THE WALL FOOTING. SEE STRUCTURAL DRAWINGS. PROVIDE A FLOOR DRAIN PER DETAIL E ON DWG M-005
6. FLOOR PENETRATION PER DETAIL D ON DWG M-003
7. 2" AIR AND VACUUM VALVE PER DETAIL F ON DWG M-003 FOR MINGUS PUMPS AND 1" AIR AND VACUUM VALVE FOR JOCKEY PUMP.
8. 16" x 12" TEE
9. TRENCH DRAIN CAST IRON HEAVY DUTY TRENCH GRATE BY NEENAH FOUNDRY OR APPROVED EQUAL. SEE DETAIL D ON DWG M-005
10. PRESSURE ASSEMBLY PER DETAIL G ON DWG M-003
11. 1" WATER SERVICE METER, SEE CIVIL STANDARD DETAILS METER SHALL ADHERE TO APPLICABLE REQUIREMENTS OF DETAIL 316P ON DWG C-005
12. BACKFLOW ASSEMBLY PER DETAIL D ON DWG M-004
13. 1" HOSE BIB PER DETAIL B ON DWG M-004
14. HOSE RACK PER DETAIL A ON DWG M-004
15. PRESSURE INDICATING TRANSMITTER PER DETAIL H ON DWG M-004. TAPS FOR BOTH AIR RELEASE VALVE AND PRESSURE TRANSMITTER TO BE DRILLED TO ALLOW ADEQUATE SPACING
16. SURGE TANK SUPPORTS TO BE POSITIONED TO AVOID TRENCH DRAIN
17. FLOOD SWITCH SEE DWG E-401
18. OVERHEAD MONORAIL, STEEL BEAM PER DWG S-005. HOIST AND TROLLEY PER SPECIFICATION SECTION 41 22 00
19. DOUBLE DOORS
20. DOUBLE SWING GATE, SEE DETAIL 7 ON DWG A-601
21. 18" x 8" TEE
22. 18" x 6" TEE
24. CLEANOUT PER DETAIL G ON DWG M-004
87. 1" SAMPLE LINE FROM WATER MAIN WITH HOSE BIBB PER DETAIL B ON DWG M-004

Brown AND Caldwell
2 N CENTRAL AVE
SUITE 1600
PHOENIX, AZ 85004

FOR CONSTRUCTION

Registered Professional Engineer (Civil) CERTIFICATE 43859 THERESA C. MULLER Date Signed 08/17/2023 ARIZONA, U.S.A.

CITY OF PRESCOTT ARIZONA

ZONE 41 PUMP STATION, TANK AND PIPELINE

REVISIONS		
REV	DATE	DESCRIPTION

LINE IS 2 INCHES AT FULL SIZE

DESIGNED:	MWS
DRAWN:	SCP
CHECKED:	NW
CHECKED:	
APPROVED:	TM

FILENAME 152624-M-100.DWG
BC PROJECT NUMBER 152624
CLIENT PROJECT NUMBER 17-009

MECHANICAL

PUMP STATION PLAN

DRAWING NUMBER
M-100
SHEET NUMBER 45 OF 84

COP1.png CAD USER: ANSON COX PLOT DATE: 8/11/2023 10:39 AM FILENAME: 152624-M-100.DWG Path: C:\BCPW\D0474281

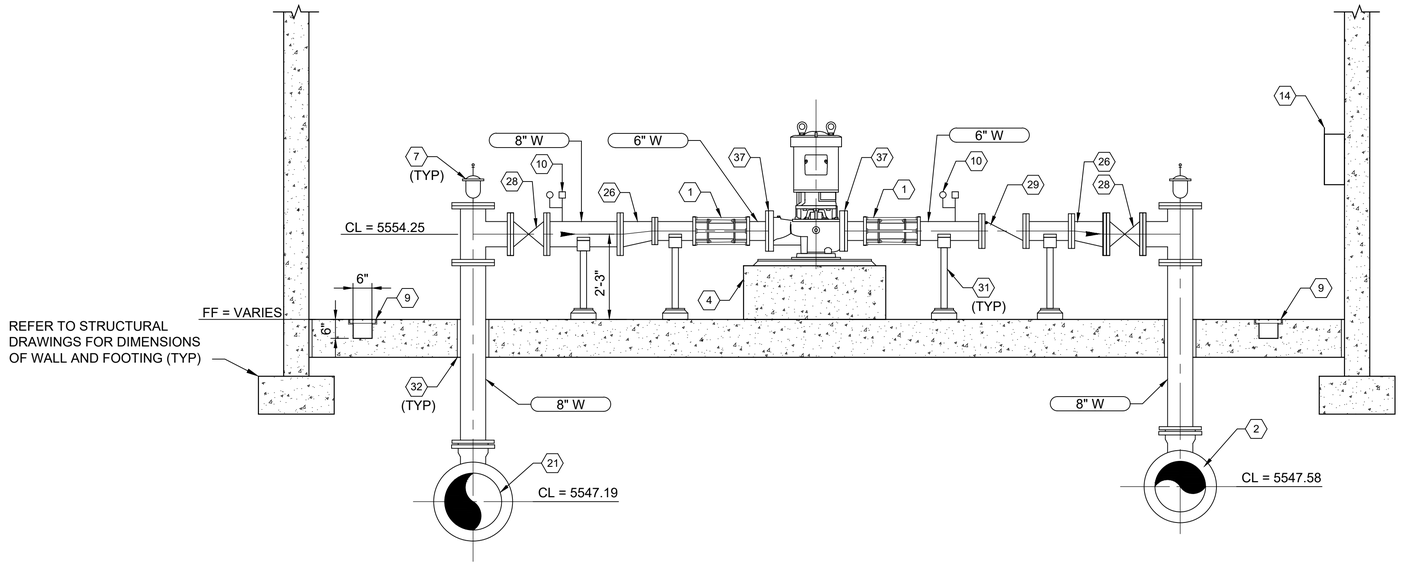

1 M-100 SECTION

0 1' 2' 4'

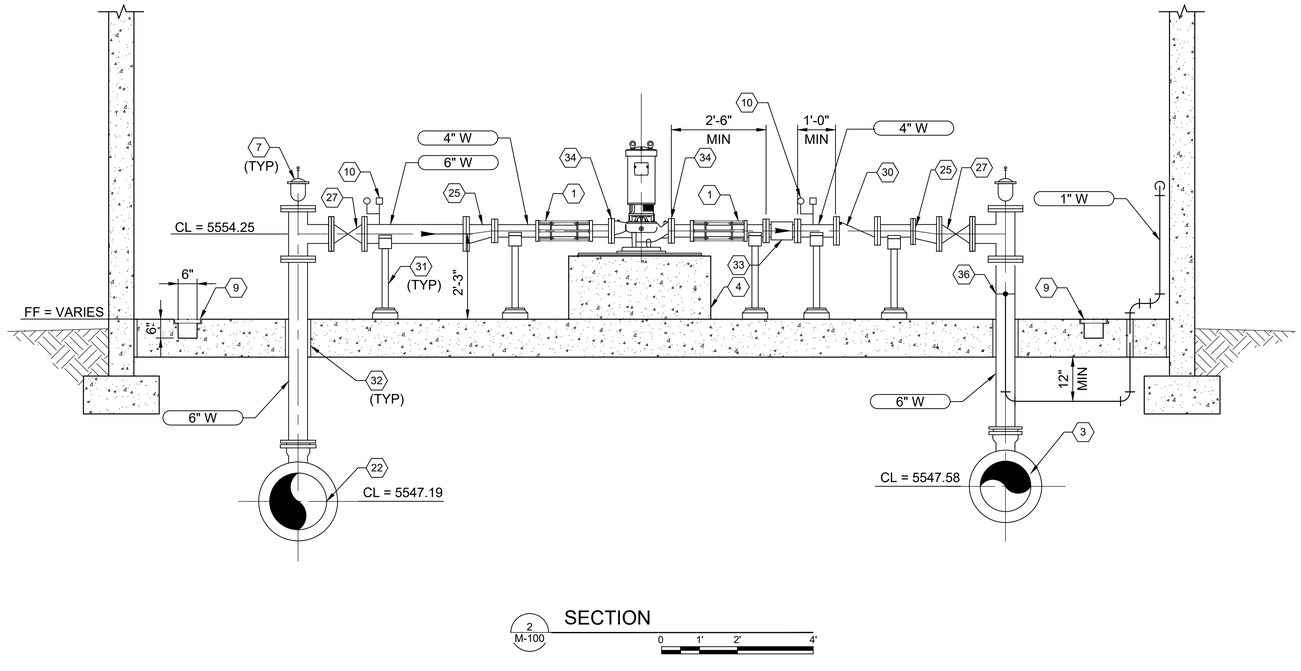

2 M-100 SECTION

0 1' 2' 4'

KEY NOTES

1. EQUIPMENT CONNECTION FITTING PER SPECIFICATION SECTION 40 05 06.16
2. 16" x 8" TEE
3. 16" x 6" TEE
4. EQUIPMENT PAD, PER DETAIL B ON DWG M-002.
7. 2" AIR AND VACUUM VALVE, PER DETAIL F ON DWG M-003 FOR MINGUS PUMPS AND 1" AIR AND VACUUM VALVE FOR JOCKEY PUMP
9. TRENCH DRAIN. CAST IRON HEAVY DUTY TRENCH GRATE BY NEENAH FOUNDRY OR APPROVED EQUAL. PER DETAIL D ON DWG M-005
10. PRESSURE ASSEMBLY, PER DETAIL G ON DWG M-003
14. HOSE RACK PER DETAIL A ON DWG M-004
21. 18" x 8" TEE
22. 18" x 6" TEE
25. 6" x 4" ECCENTRIC REDUCER
26. 8" X 6" ECCENTRIC REDUCER
27. 6" GATE VALVE
28. 8" GATE VALVE
29. 6" PRESSURE SUSTAINING CHECK VALVE. SEE SPECIFICATION SECTION 40 05 72.
30. 4" PRESSURE SUSTAINING CHECK VALE. SEE SPECIFICATION SECTION 40 05 72.
31. PIPE SUPPORT, SEE DETAIL A ON DWG M-003
32. FLOOR PENETRATION, SEE DETAIL D ON DWG M-003
33. 4" FLOW METER FOR JOCKEY PUMP
34. 4" X 3" MATING FLANGE TO ATTACH TO SUCTION AND DISCHARGE OF PUMP
36. TAPPING SADDLE PER DETAIL E ON DWG M-004 FOR PUMP ROOM UTILITY STATION
37. 6" X 5" MATING FLANGE TO ATTACH TO SUCTION AND DISCHARGE OF PUMP

Brown AND Caldwell
2 N CENTRAL AVE
SUITE 1600
PHOENIX, AZ 85004

FOR CONSTRUCTION

Registered Professional Engineer CERTIFICATE 43859 THERESA C. MULLER Date Signed 08/17/22 ARIZONA, U.S.A.

CITY OF PRESCOTT ARIZONA

ZONE 41 PUMP STATION, TANK AND PIPELINE

REVISIONS

REV	DATE	DESCRIPTION

LINE IS 2 INCHES AT FULL SIZE

DESIGNED:	MWS
DRAWN:	SCP
CHECKED:	NW
CHECKED:	
APPROVED:	TM

FILENAME 152624-M-101.DWG
BC PROJECT NUMBER 152624
CLIENT PROJECT NUMBER 17-009

MECHANICAL

PUMP STATION SECTION AND DETAILS

DRAWING NUMBER
M-101

SHEET NUMBER
46 OF 84

Path: C:\BCPW\D0474281 FILENAME: 152624-M-101.DWG PLOT DATE: 7/28/2022 3:34 PM CAD USER: ANSON COX
COP1.png

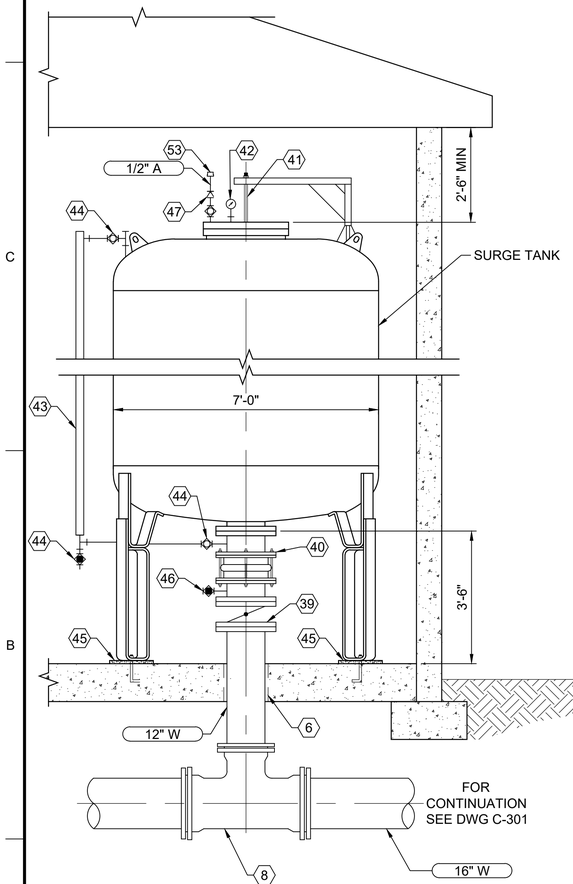

1 M-100 SECTION

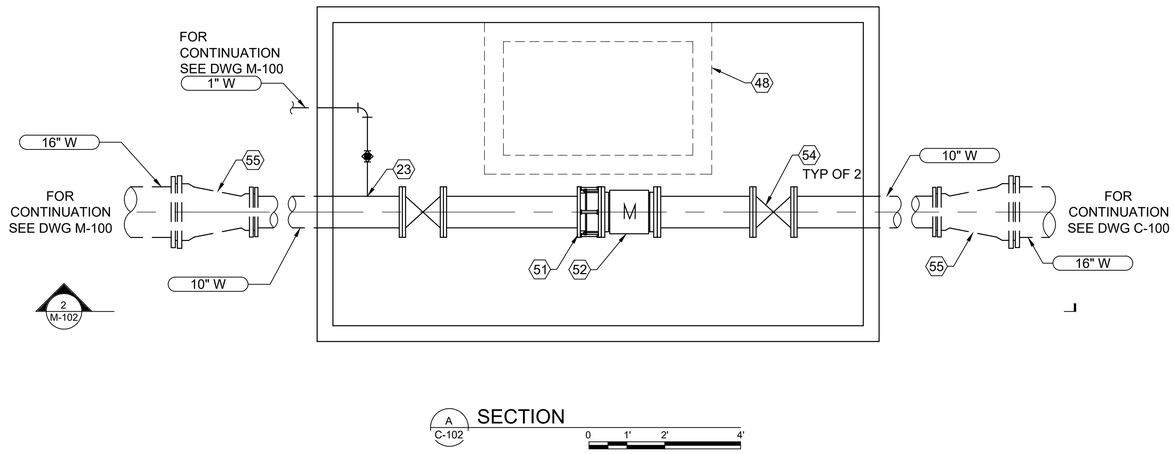

A C-102 SECTION

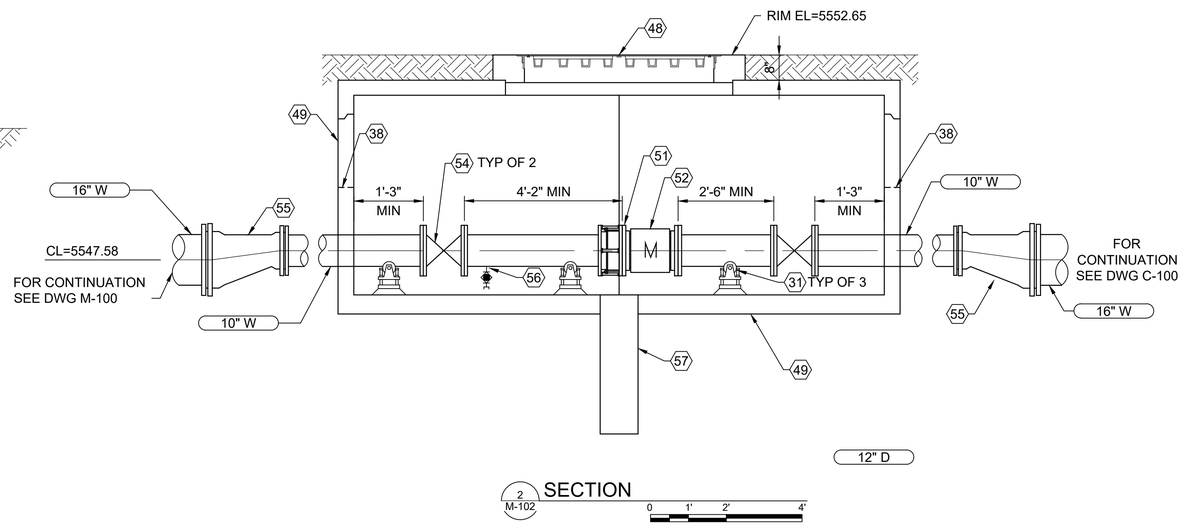

2 M-102 SECTION

KEY NOTES

- 6 FLOOR PENETRATION, SEE DETAIL D ON DWG M-003.
- 8 16" X 12" TEE
- 23 SAMPLE TAP PER DETAIL E ON DWG M-004. 1" W ROUTED INTO BUILDING, FOR CONTINUATION SEE DWG M-100
- 31 PIPE SUPPORT, PER COP STANDARD DTL QCSD 321Q
- 38 PIPE SLOT TO BE 1'-0" MINIMUM WIDTH X 2'-10" HEIGHT
- 39 12" BUTTERFLY VALVE
- 40 12" RESTRAINED FLEXIBLE RUBBER EXPANSION JOINT
- 41 DAVIT
- 42 PRESSURE GAUGE
- 43 MAGNETIC LEVEL GAUGE
- 44 1/2" BALL VALVE
- 45 1" TO 2" GROUT PAD AT SLAB TO BE INSTALLED AFTER FINAL SURGE VESSEL PLUMB/LEVEL ADJUSTMENT
- 46 2" FLANGED CONNECTION WITH BALL VALVE FOR TANK DRAIN.
- 47 CHECK VALVE FOR SURGE TANK AIR SUPPLY FROM COMPRESSOR
- 48 ALUMINUM DOUBLE DOORS TO BE 48" X 72"
- 49 VAULT, PIPE SUPPORT, LADDER AND ACCESS HATCH PER COP STD DTL QCSD 321Q FOR AN 8-INCH METER. METER, PIPE, VALVES AND OTHER APPERTENANCES SHALL BE AS SHOWN ON THIS DRAWING
- 50 6" COMPACTED AGGREGATE BASE
- 51 DISMANTLING JOINT FITTING PER SPECIFICATION SECTION 40 05 06.16
- 52 10" MAGNETIC FLOW METER
- 53 CONNECTION FOR AIR COMPRESSOR
- 54 10" GATE VALVE
- 55 16" X 10" ECCENTRIC REDUCER
- 56 SAMPLE TAP PER DETAIL E ON DWG M-004
- 57 SUMP PIT PER COP STD QCSD 321Q

Brown AND Caldwell
2 N CENTRAL AVE
SUITE 1600
PHOENIX, AZ 85004

FOR CONSTRUCTION

Registered Professional Engineer
CERTIFICATE
43859
THERESA C. MULLER
Date Signed
ARIZONA, U.S.A.

CITY OF PRESCOTT
ARIZONA

ZONE 41 PUMP STATION, TANK AND PIPELINE

REVISIONS

REV	DATE	DESCRIPTION

LINE IS 2 INCHES AT FULL SIZE

DESIGNED:	MWS
DRAWN:	SCP
CHECKED:	NW
CHECKED:	
APPROVED:	TM

FILENAME
152624-M-102.DWG

BC PROJECT NUMBER
152624

CLIENT PROJECT NUMBER
17-009

MECHANICAL

SECTION AND DETAILS

DRAWING NUMBER
M-102

SHEET NUMBER
47 OF 84

Path: C:\BCPWD0474281 FILENAME: 152624-M-102.DWG PLOT DATE: 7/28/2022 3:38 PM CAD USER: ANSON COX
COP1.png

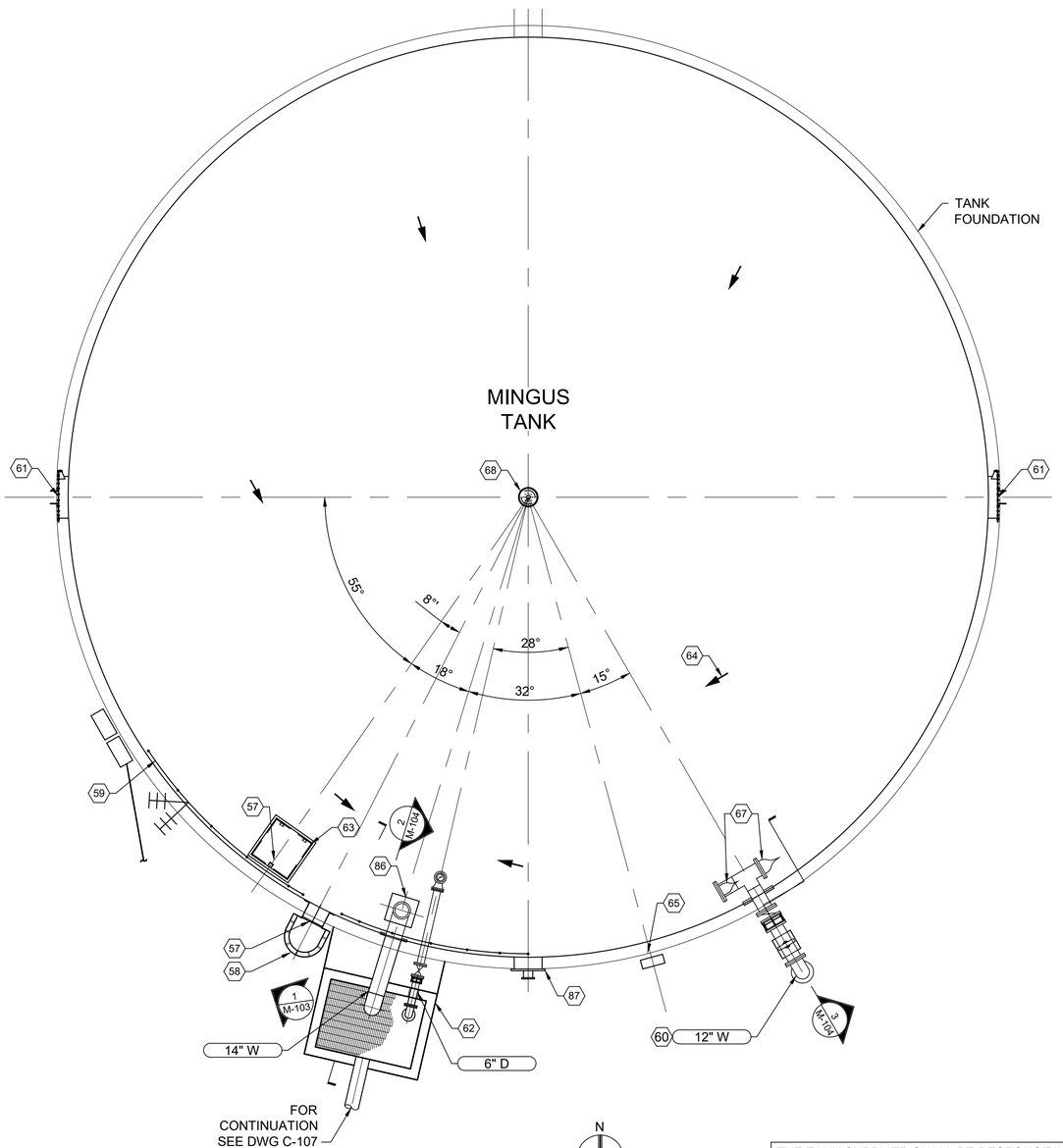

SITE PLAN

0 4' 8' 12'

THE TANK SUPPLIER SHALL BE RESPONSIBILE FOR THE DESIGN OF THE TANK INTERIOR COLUMN SYSTEM AND FOUNDATION FOR SUPPORT OF THE ROOF STRUCTURE. SUBMIT DESIGN CALCULATIONS AND DRAWINGS SIGNED AND SEALED BY AN ENGINEER REGISTERED IN THE STATE OF ARIZONA.

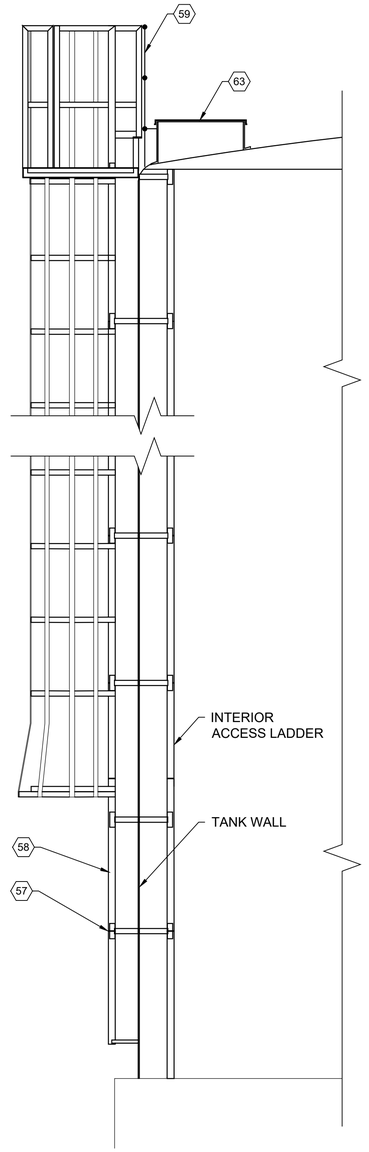

1 M-103 SECTION

0 2' 4' 6'

GENERAL NOTES

1. TANK FOUNDATION, ACCESS MANWAYS, HATCHES, INTERIOR AND EXTERIOR LADDERS AND INSPECTION PLATFORM TO BE PROVIDED BY THE TANK MANUFACTURER.
2. TANK DIMENSIONS, MATERIALS AND CONSTRUCTION TO BE PER SECTION 33 16 13.13.

KEY NOTES

57 ACCESS LADDER WITH SAFETY CAGE
58 ANTI-CLIMB DEVICE
59 42" HIGH SAFETY HANDRAIL WITH TOE BOARD
60 TANK INLET/OUTLET
61 30" DIAMETER ACCESS MANWAY
62 OVERFLOW BOX, PER DETAIL A ON DWG M-104
63 36" x 36" ACCESS HATCH WITH LOCKABLE HASP.
64 SLOPE FLOOR TO DRAIN.
65 LIQUID LEVEL GAGE BOARD ASSEMBLY
67 DUCK BILL CHECK VALVE PER DETAIL A ON DWG M-200.
68 TANK VENT PER DETAIL C ON DWG M-005.
86 24" x 24" ACCESS HATCH WITH LOCKABLE HASP.
87 FLUSH TYPE CLEAN-OUT PER DETAIL D ON DWG M-200.

Brown AND Caldwell
2 N CENTRAL AVE
SUITE 1600
PHOENIX, AZ 85004

FOR CONSTRUCTION

Registered Professional Engineer (Civil) CERTIFICATE 43859 THERESA C. MULLER Date Signed 08/11/23 ARIZONA, U.S.A.

CITY OF PRESCOTT ARIZONA

ZONE 41 PUMP STATION, TANK AND PIPELINE

REVISIONS		
REV	DATE	DESCRIPTION

LINE IS 2 INCHES AT FULL SIZE

DESIGNED:	MWS
DRAWN:	SCP
CHECKED:	NW
CHECKED:	
APPROVED:	TM

FILENAME
152624-M-103.DWG

BC PROJECT NUMBER
152624

CLIENT PROJECT NUMBER
17-009

MECHANICAL

TANK PLAN AND SECTION

DRAWING NUMBER
M-103

SHEET NUMBER
48 OF 84

Path: C:\BCPWD0474281 FILENAME: 152624-M-103.DWG PLOT DATE: 8/11/2023 10:41 AM CAD USER: ANSON COX
COPY.png

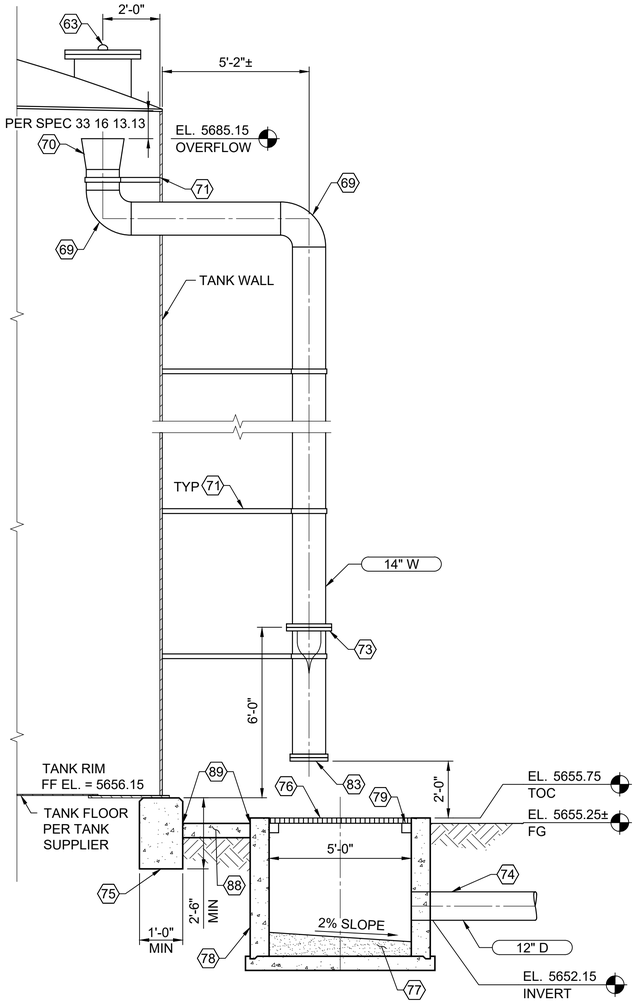

2 M-104 SECTION

0 2' 4' 6'

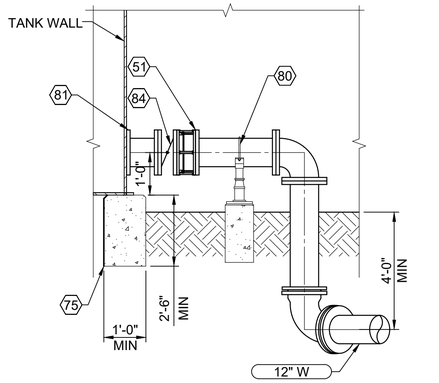

3 M-104 TANK INLET/OUTLET SECTION

0 2' 4' 6'

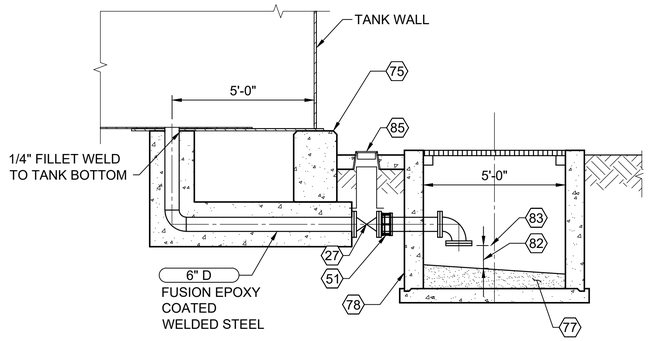

4 M-104 SECTION

0 2' 4' 6'

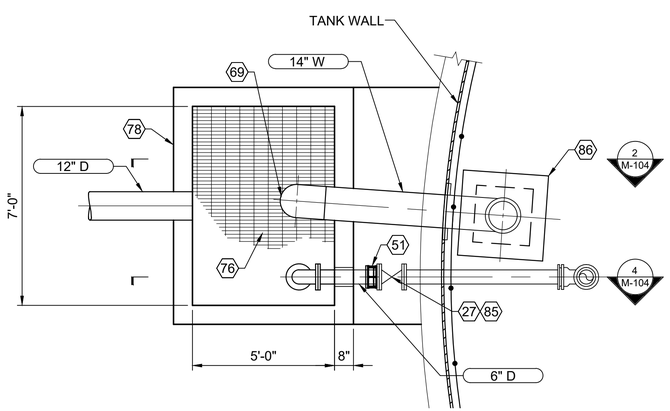

A M-104 DETAIL

0 2' 4' 6'

GENERAL NOTES

1. TANK ACCESS HATCH, AND PIPE SUPPORTS TO BE PROVIDED BY THE TANK MANUFACTURER.

KEY NOTES

27 6" GATE VALVE

51 DISMANTLING JOINT PER SPECIFICATION SECTION 40 05 06.16.

57 ACCESS LADDER

59 42" HIGH SAFETY HANDRAIL WITH TOE BOARD

63 36" X 36" ACCESS HATCH WITH LOCKABLE HASP

69 90° LONG RADIUS BEND

70 18" x 14" CONCENTRIC REDUCER

71 PIPE SUPPORT AND TANK PENETRATION REINFORCING PER TANK SUPPLIER.

73 TIDEFLEX SERIES 37 CHECK VALVE.

74 TANK FOUNDATION AND RING WALL DESIGN PER TANK SUPPLIER AND SPECIFICATION 33 16 13 13.

75 TANK FOUNDATION DESIGN BY WATER STORAGE TANK SUPPLIER.

76 GALVANIZED GRATING

77 NON-SHRINK GROUT

78 5' x 7' RECTANGULAR PRECAST CONCRETE CATCH BASIN.

79 GRATING SUPPORT

80 PIPE SUPPORT. PIPE SADDLE SUPPORT TO BE ANVIL FIG. 259. STANCHION DIAMETER AND BASEPLATE TO BE PER DETAIL A ON DWG M-003

81 FLANGE INSULATING KIT PER DETAIL B ON DWG M-005

82 DISTANCE BETWEEN GROUT AND TERMINATION OF 6" D TO BE 1'-0"

83 SECURE #16 MESH TYPE 316 SST SCREEN TO END. SCREEN TO BE SECURED AND BOLTED BETWEEN FLANGED END OF PIPE AND BACKUP FLANGE.

84 BUTTERFLY VALVE WITH OPERATOR FACING TO THE SIDE AWAY FROM TANK WALL.

85 VALVE BOX PER DETAIL 391Q ON DWG C-005

86 24" x 24" ACCESS HATCH WITH LOCKABLE HASP

88 6-INCH CONCRETE SLAB WITH #5 @ 12" EW

89 1/2" EXPANSION JOINT MATERIAL

Brown AND Caldwell
2 N CENTRAL AVE
SUITE 1600
PHOENIX, AZ 85004

FOR CONSTRUCTION

Registered Professional Engineer CERTIFICATE 43859 THERESA C. MULLER Date Signed 08/11/2023 ARIZONA, U.S.A.

CITY OF PRESCOTT ARIZONA

ZONE 41 PUMP STATION, TANK AND PIPELINE

REVISIONS

REV	DATE	DESCRIPTION

LINE IS 2 INCHES AT FULL SIZE

DESIGNED: MWS
DRAWN: SCP
CHECKED: NW
CHECKED:
APPROVED: TM

FILENAME 152624-M-104.DWG
BC PROJECT NUMBER 152624
CLIENT PROJECT NUMBER 17-009

MECHANICAL

TANK SECTION AND DETAILS

DRAWING NUMBER
M-104

SHEET NUMBER
49 OF 84

Path: C:\BCPW\D0474281 FILENAME: 152624-M-104.DWG PLOT DATE: 8/11/2023 10:42 AM CAD USER: ANSON COX
COP1.png

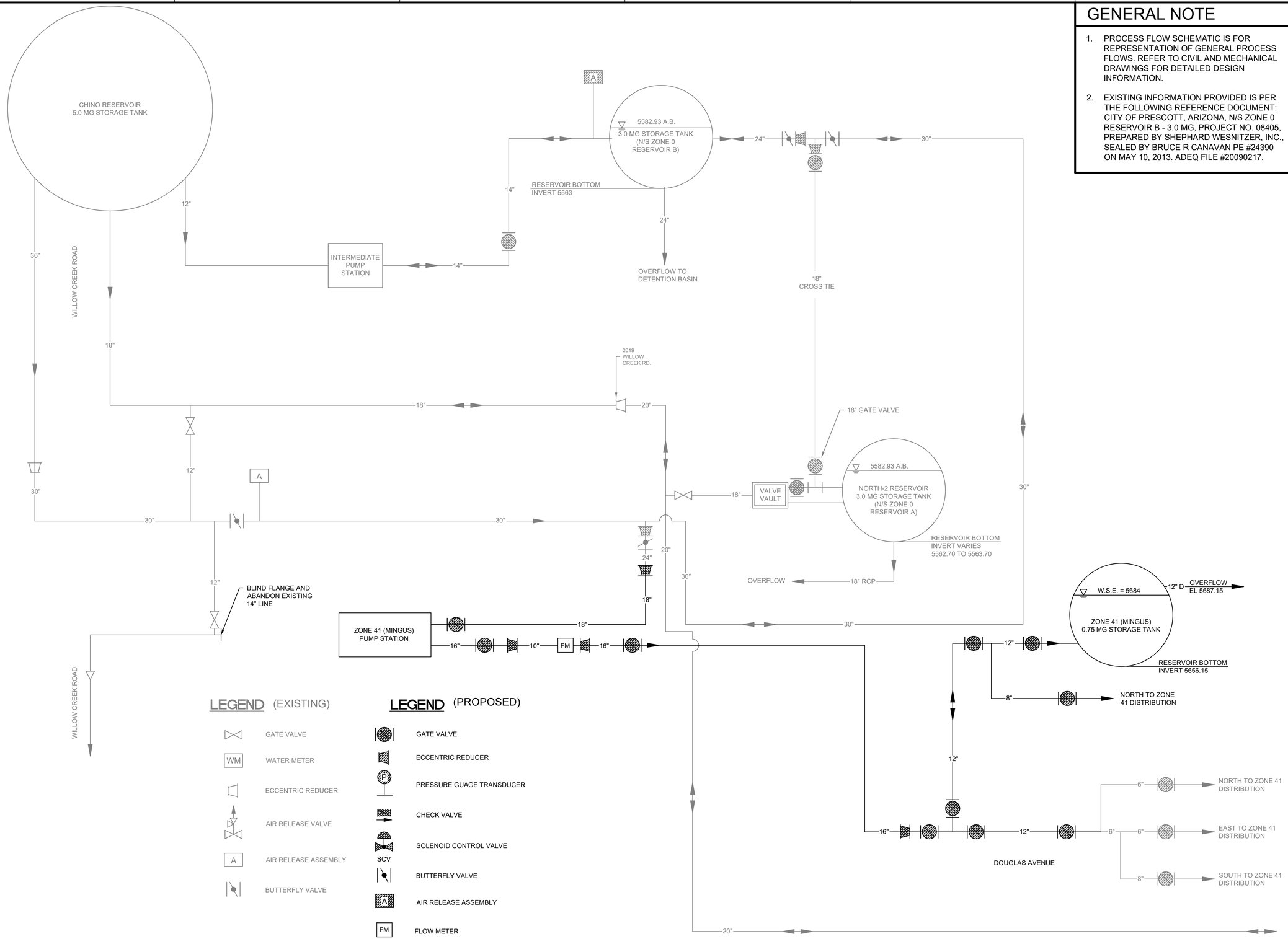

GENERAL NOTE

1. PROCESS FLOW SCHEMATIC IS FOR REPRESENTATION OF GENERAL PROCESS FLOWS. REFER TO CIVIL AND MECHANICAL DRAWINGS FOR DETAILED DESIGN INFORMATION.
2. EXISTING INFORMATION PROVIDED IS PER THE FOLLOWING REFERENCE DOCUMENT: CITY OF PRESCOTT, ARIZONA, N/S ZONE 0 RESERVOIR B - 3.0 MG, PROJECT NO. 08405, PREPARED BY SHEPHARD WESNITZER, INC., SEALED BY BRUCE R CANAVAN PE #24390 ON MAY 10, 2013. ADEQ FILE #20090217.

Brown AND Caldwell
2 N CENTRAL AVE
SUITE 1600
PHOENIX, AZ 85004

FOR CONSTRUCTION

Registered Professional Engineer (Chemical)
CERTIFICATE NO. 43859
THERESA C. MULLER
Date Signed 10/5/2021
ARIZONA, U.S.A.

CITY OF PRESCOTT ARIZONA

ZONE 41 PUMP STATION, TANK AND PIPELINE

REVISIONS

REV	DATE	DESCRIPTION

LINE IS 2 INCHES AT FULL SIZE

DESIGNED: MWS
DRAWN: SCP
CHECKED: NW
CHECKED:
APPROVED: TM

FILENAME
152624-M-110.DWG
BC PROJECT NUMBER
152624
CLIENT PROJECT NUMBER
17-009

MECHANICAL

WATER MAIN PROCESS FLOW DIAGRAM

DRAWING NUMBER
M-110

SHEET NUMBER
50 OF 84

Path: C:\BCPW\D0474281 FILENAME: 152624-M-110.DWG PLOT DATE: 8/11/2023 10:44 AM CAD USER: ANSON COX
COP1.png

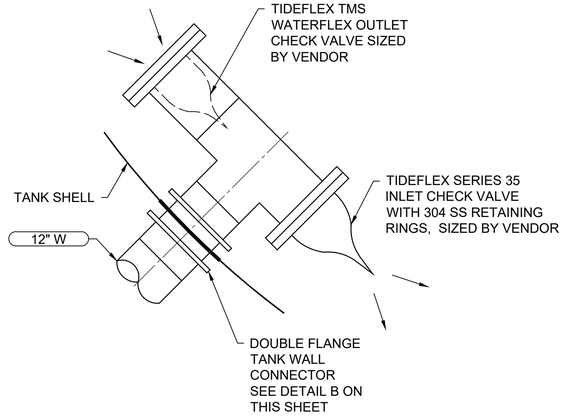

TANK INLET DETAIL

DETAIL A / -

SCALE: NO SCALE

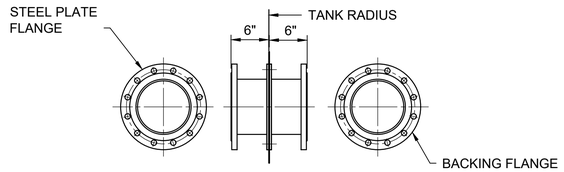

DOUBLE FLANGE CONNECTOR DETAIL

DETAIL B / -

SCALE: NO SCALE

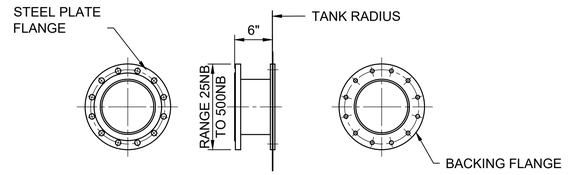

SINGLE FLANGE CONNECTOR DETAIL

DETAIL C / -

SCALE: NO SCALE

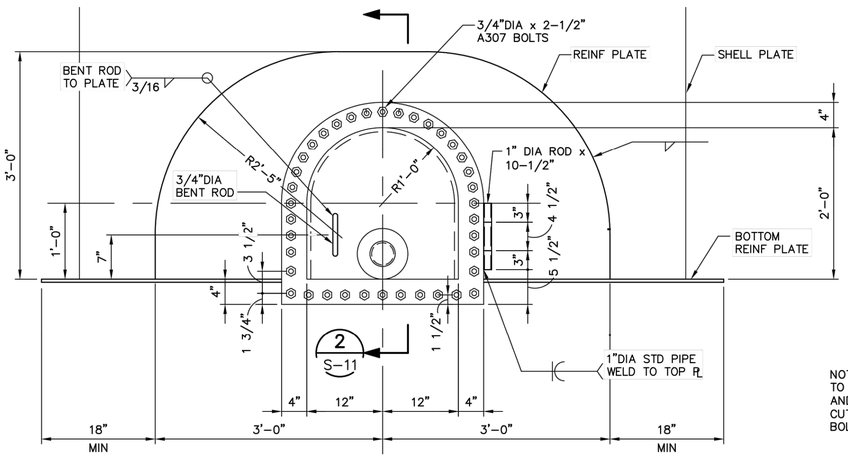

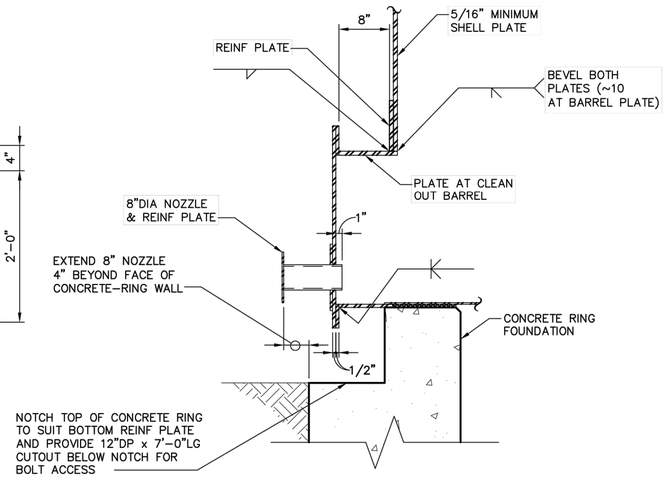

FLUSH TYPE CLEAN-OUT DETAIL

DETAIL D / -

SCALE: NO SCALE

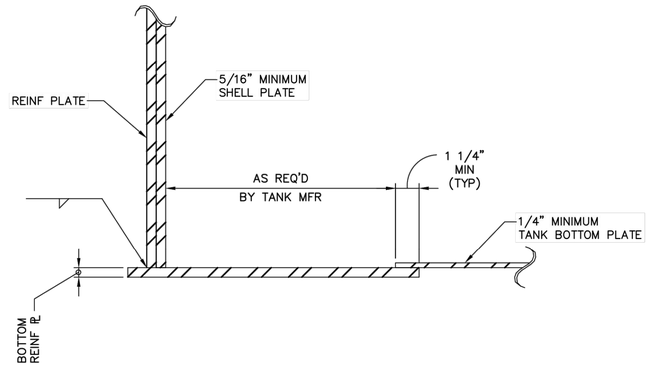

MEMBER SIZES AND THICKNESSES SHOWN ON DRAWINGS ARE APPROXIMATE AND MAY BE REVISED BY THE TANK MANUFACTURER FOR EFFICIENCY AND ADEQUACY. TANK MANUFACTURER SHALL BE RESPONSIBLE FOR THE DESIGN OF THE TANK WALL, ROOF, SUPPORT FRAMING, PIPING, APPURTENANCES, AND CONNECTIONS. SUBMIT DESIGN CALCULATIONS AND DRAWINGS SIGNED AND SEALED BY AN ENGINEER REGISTERED IN THE STATE OF ARIZONA FOR REVIEW.

Brown AND Caldwell
2 N CENTRAL AVE
SUITE 1600
PHOENIX, AZ 85004

FOR CONSTRUCTION

Registered Professional Engineer (Civil) CERTIFICATE 43859 THERESA C. MULLER Date Signed 11/19/21 ARIZONA, U.S.A.

CITY OF PRESCOTT ARIZONA

ZONE 41 PUMP STATION, TANK AND PIPELINE

REVISIONS		
REV	DATE	DESCRIPTION

LINE IS 2 INCHES AT FULL SIZE

DESIGNED:	MWS
DRAWN:	SCP
CHECKED:	NW
CHECKED:	
APPROVED:	TM

FILENAME
152624-M-200.DWG

BC PROJECT NUMBER
152624

CLIENT PROJECT NUMBER
17-009

MECHANICAL

DETAILS

DRAWING NUMBER
M-200

SHEET NUMBER
51 OF 84

Path: C:\BCPW\D0474281 FILENAME: 152624-M-200.DWG PLOT DATE: 8/11/2023 10:47 AM CAD USER: ANSON COX
COPI1.png

HVAC DESIGNATIONS AND SYMBOLS

- 12x24 — AIR DUCT. FIRST DIMENSION DUCT SIDE SHOWN. SECOND DIMENSION SIDE NOT SHOWN.
- 24x12 — SUPPLY OR OUTSIDE AIR DUCT (FIRST DIMENSION DUCT WIDTH)
- EXHAUST AIR DUCT
- BD — MANUAL BALANCING DAMPER
- FLEXIBLE DUCT CONNECTION
- WALL LOUVER
- EXHAUST OR RETURN AIR GRILLE OR REGISTER
- SUPPLY REGISTER
- CEILING SUPPLY REGISTER
- CEILING EXHAUST AIR GRILLE

HVAC CONTROL SYMBOLS

- (FS) DUCT-MOUNTED AIR FLOW SWITCH
- (DP) DIFFERENTIAL PRESSURE SWITCH
- (PS) PRESSURE SWITCH
- (SD) DUCT-MOUNTED SMOKE DETECTOR
- (TS) TEMPERATURE SENSOR
- 24V CONTROL WIRING
- DI — DIGITAL INPUT
- DO — DIGITAL OUTPUT
- AI — ANALOG INPUT
- AO — ANALOG OUTPUT

AIR FLOW SCHEMATIC SYMBOLS

- LOUVER
- M — MOTORIZED DAMPER
- H C C — AIR HANDLING UNIT (SHOWN WITH ECONOMIZER)
- PENTHOUSE LOUVER (EXHAUST SHOWN)
- BDD — BACKDRAFT DAMPER
- HEAT PUMP UNIT
- T — UNIT HEATER (SHOWN WITH INTEGRAL THERMOSTAT)
- M — PROPELLER FAN

DIFFUSER, REGISTER AND GRILLE SYMBOL

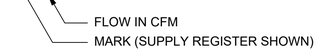

NOTES:

1. FOR DUCT MOUNTED REGISTER, SEE DETAIL A ON SHEET MH-002.

LEGEND

MARK	DESCRIPTION
SR	SUPPLY REGISTER
E/RG	EXHAUST/RETURN GRILLE

Brown AND Caldwell
2 N CENTRAL AVE
SUITE 1600
PHOENIX, AZ 85004

FOR CONSTRUCTION

Registered Professional Engineer (Civil) CERTIFICATE 43859 THERESA C. MULLER Date Signed 11/19/21 ARIZONA, U.S.A.

CITY OF PRESCOTT ARIZONA

ZONE 41 PUMP STATION, TANK AND PIPELINE

REVISIONS

REV	DATE	DESCRIPTION

LINE IS 2 INCHES AT FULL SIZE

DESIGNED:	TM
DRAWN:	SCP
CHECKED:	TM
CHECKED:	TM
APPROVED:	TM

FILENAME
152624-MH-001.DWG

BC PROJECT NUMBER
152624

CLIENT PROJECT NUMBER
17-009

HVAC

SYMBOLS, ABBREVIATIONS, AND NOTES

DRAWING NUMBER

MH-001

SHEET NUMBER
52 OF 84

COP1.png CAD USER: ANSON COX PLOT DATE: 8/11/2023 10:49 AM FILENAME: 152624-MH-001.DWG Path: C:\BCPWD\D474246

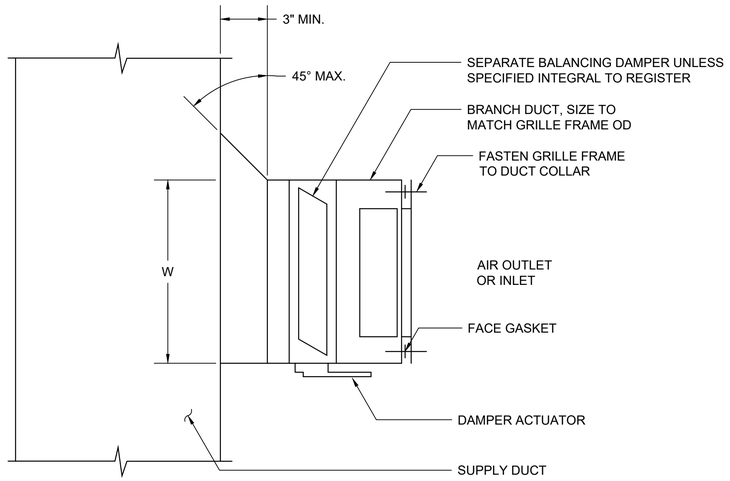

DUCT MOUNTED REGISTER

DETAIL A / MH-001

SCALE: NONE

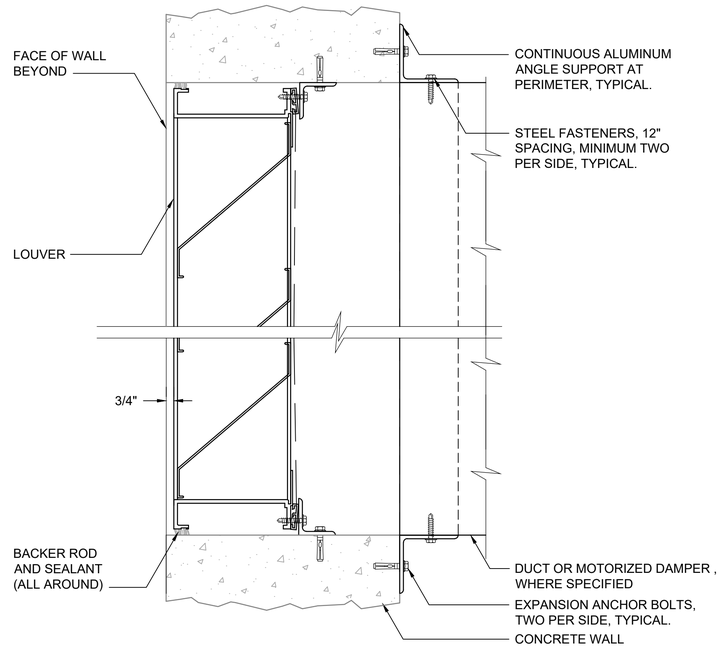

LOUVER INSTALLATION

DETAIL B / MH-101

SCALE: NONE

Brown AND Caldwell
2 N CENTRAL AVE
SUITE 1600
PHOENIX, AZ 85004

FOR CONSTRUCTION

Registered Professional Engineer (Civil) CERTIFICATE 43859 THERESA C. MULLER Date Signed 08/11/23 ARIZONA, U.S.A.

CITY OF PRESCOTT ARIZONA

ZONE 41 PUMP STATION, TANK AND PIPELINE

REVISIONS

REV	DATE	DESCRIPTION

LINE IS 2 INCHES AT FULL SIZE

DESIGNED:	TM
DRAWN:	SCP
CHECKED:	TM
CHECKED:	TM
APPROVED:	TM

FILENAME
152624-MH-002.DWG

BC PROJECT NUMBER
152624

CLIENT PROJECT NUMBER
17-009

HVAC

DETAILS

DRAWING NUMBER

MH-002

SHEET NUMBER
53 OF 84

Path: C:\BCPWD\0474246 FILENAME: 152624-MH-002.DWG PLOT DATE: 8/11/2023 10:50 AM CAD USER: ANSON.COX
COP1.png

SPLIT SYSTEM HEAT PUMP SCHEDULE

EQUIPMENT NO.	NAME	LOCATION	TYPE	COOLING			HEATING			OUTDOOR AIR TEMP		INDOOR AIR TEMP			AIRFLOW				ELECTRICAL REQUIREMENTS			WEIGHT (LBS)	NOTES
				SENSIBLE CAPACITY (MBH)	TOTAL CAPACITY (MBH)	EFFICIENCY	HEATING SOURCE	TOTAL HEAT OUTPUT (MBH)	EFFICIENCY	COOLING DB (F)	HEATING DB (F)	SUMMER DESIGN DB (F)	SUMMER DESIGN WB (F)	WINTER DESIGN DB (F)	SA TOTAL (ACFM)	ESP (IN WC)	MIN OSA (ACFM)	MAX OSA (ACFM)	VOLTS/ PHASE	UNIT MCA	UNIT MOCP		
AHU-1	ELECTRICAL ROOM AIR HANDLING UNIT	ELECTRICAL ROOM	INDOOR AIR HANDLING UNIT	82.1	113.9	11.0-EER	HEAT PUMP	49.01	3.3-COP	95	17	80	67	60	4,000	1.30	400	4,000	460/3	6	15	500	1, 2
HP-1	ELECTRICAL ROOM HEAT PUMP UNIT	EXTERIOR	OUTDOOR HEAT PUMP UNIT	82.1	113.9	11.0-EER	HEAT PUMP	49.01	3.3-COP	95	17	NA	NA	NA	NA	NA	NA	NA	460/3	23	30	600	1

NOTES:
1. HEATING AND COOLING CAPACITIES AND EFFICIENCIES ARE COMBINATION RATINGS FOR THE INDOOR AND OUTDOOR UNITS.
2. ESP DOES NOT INCLUDE LOSSES THROUGH THE UNIT INCLUDING COILS, FILTERS, ETC.

FAN SCHEDULE

EQUIPMENT NO.	NAME	LOCATION	TYPE	AIRFLOW REQUIREMENTS			ELECTRICAL REQUIREMENTS						SOUND POWER	WEIGHT (LBS)	NOTES
				AIRFLOW (ACFM)	ESP (IN WC)	FRPM	MOTOR (BHP)	MOTOR SIZE (HP)	VOLTS/ PHASE	MOTOR ENCLOSURE	DRIVE TYPE	FLA	INLET (dBA)		
EF-1	PUMP STATION EXHAUST FAN NO. 1	PUMP STATION	SIDEWALL PROPELLER, EXHAUST	1,500	0.375	924	0.36	1/2	460/3	TEFC	BELT	1.1	66	225	1,2,5,7
EF-2	PUMP STATION EXHAUST FAN NO. 2	PUMP STATION	SIDEWALL PROPELLER, EXHAUST	1,500	0.375	924	0.36	1/2	460/3	TEFC	BELT	1.1	66	225	3,4,6

NOTES:
1. PROVIDE WITH LONG WALL HOUSING, EXTENDED, WITH OSHA GUARD.
2. PROVIDE WITH GRAVITY BACKDRAFT DAMPER.
3. PROVIDE WITH WALL LOUVER DISCHARGE ACCESSORY.

UNIT HEATER SCHEDULE

EQUIPMENT NO.	NAME	LOCATION	TYPE	CFM	ELECTRICAL REQUIREMENTS				WEIGHT (LBS)	NOTES
					KW	VOLTS/ PHASE	MOTOR ENCLOSURE	MAX. AMPS RATING		
UH-1	PUMP STATION UNIT HEATER NO. 1	PUMP STATION	ELECTRIC	700	5.0	480/3	TEFC	6.1	250	1
UH-2	PUMP STATION UNIT HEATER NO. 2	PUMP STATION	ELECTRIC	700	5.0	480/3	TEFC	6.1	250	1

NOTES:
1. HEATER SHALL BE PROVIDED WITH INTEGRAL THERMOSTAT.
2. PROVIDE WITH WALL-MOUNT BRACKET.

MOTORIZED DAMPER SCHEDULE

EQUIPMENT NO.	NAME	LOCATION	TYPE	BLADE CONFIGURATION	FAIL POSITION	AIRFLOW (CFM)	DIMENSIONS			MAXIMUM PRESSURE DROP (IN WC)	VOLTAGE	NOTES
							WIDTH (IN)	HEIGHT (IN)	DIA. (IN)			
MD-1	ELECTRICAL ROOM RELIEF LOUVER	ELECTRICAL ROOM	TWO-POSITION	OPPOSED	OPEN	3,600	48	32	-	0.003	24VDC	1

NOTES:
1. PROVIDE WITH LIMIT SWITCH.

LOUVER SCHEDULE

EQUIPMENT NO.	NAME	TYPE	AIRFLOW (ACFM)	DIMENSIONS		FREE AREA (SF)	FREE AREA VELOCITY (FPM)	MAXIMUM PRESSURE DROP (IN WC)	NOTES
				WIDTH (IN)	HEIGHT (IN)				
LVR-1	PUMP STATION INTAKE LOUVER 1	DRAINABLE BLADE, INTAKE	1,500	32	32	3.24	462	0.03	
LVR-2	PUMP STATION INTAKE LOUVER 2	DRAINABLE BLADE, INTAKE	1,500	32	32	3.24	462	0.03	
LVR-3	PUMP STATION OVERFLOW LOUVER 1	DRAINABLE BLADE, INTAKE	-	32	16	1.45	-	-	
LVR-4	PUMP STATION OVERFLOW LOUVER 2	DRAINABLE BLADE, INTAKE	-	32	16	1.45	-	-	
LVR-5	ELECTRICAL ROOM INTAKE LOUVER	DRAINABLE BLADE, INTAKE	4,000	72	40	9.70	412	0.03	
LVR-6	ELECTRICAL ROOM RELIEF LOUVER	DRAINABLE BLADE, EXHAUST	3,600	48	32	5.02	717	0.08	

NOTES:

Brown AND Caldwell
2 N CENTRAL AVE
SUITE 1600
PHOENIX, AZ 85004

FOR CONSTRUCTION

Registered Professional Engineer CERTIFICATE Issued THERESA C. MULLER 43859 Date Signed 10/19/21 ARIZONA, U.S.A.

CITY OF PRESCOTT ARIZONA

ZONE 41 PUMP STATION, TANK AND PIPELINE

REVISIONS

REV	DATE	DESCRIPTION
0		

LINE IS 2 INCHES AT FULL SIZE

DESIGNED: TM
DRAWN: SCP
CHECKED: TM
CHECKED: TM
APPROVED: TM

FILENAME 152624-MH-003.DWG
BC PROJECT NUMBER 152624
CLIENT PROJECT NUMBER 17-009

HVAC

EQUIPMENT SCHEDULES

DRAWING NUMBER
MH-003

SHEET NUMBER
54 OF 84

COP1.png
Path: C:\BCPW\D0474246 FILENAME: 152624-MH-003.DWG PLOT DATE: 8/11/2023 10:52 AM CAD USER: ANSON COX

GENERAL NOTES:

1. FOR LOUVER INSTALLATION, SEE DETAIL B ON SHEET MH-002.
2. REFRIGERANT PIPING TO/FROM RESPECTIVE INDOOR/OUTDOOR UNITS SHALL BE INSTALLED AS RECOMMENDED BY MANUFACTURER. CONTRACTOR SHALL INSULATE IN ACCORDANCE WITH THE INTERNATIONAL ENERGY CONSERVATION CODE.

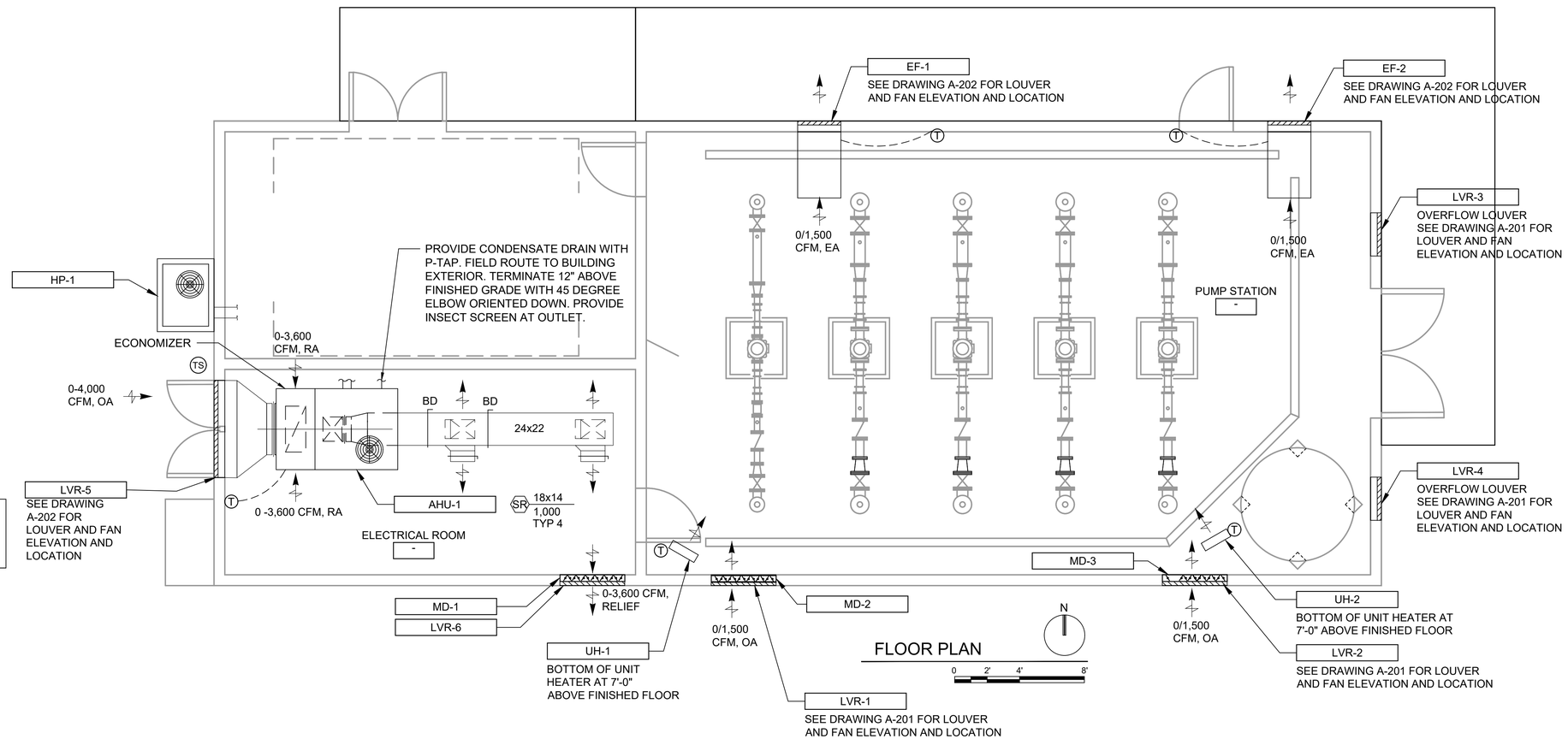

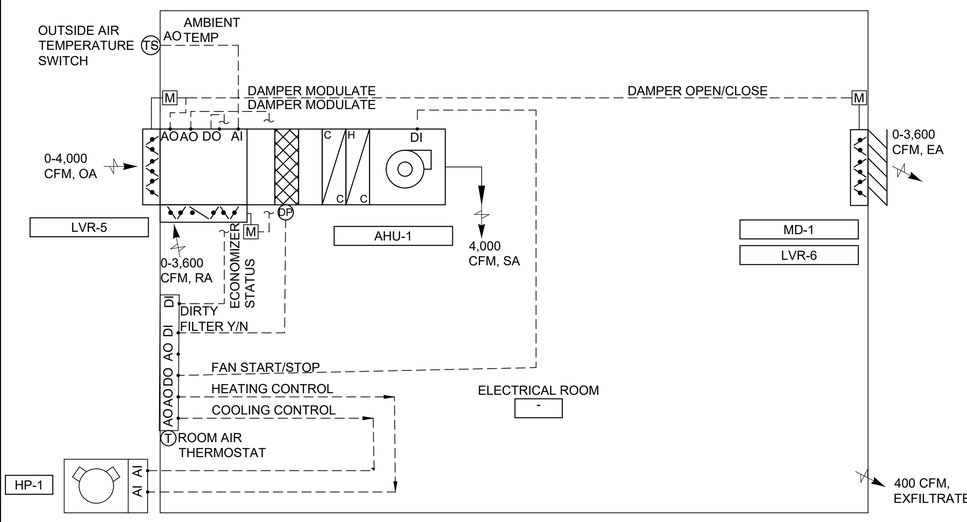

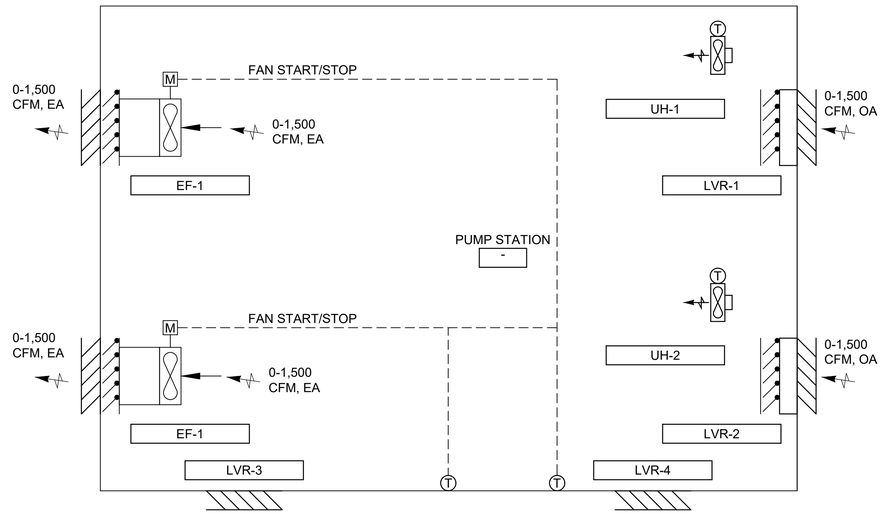

Brown AND Caldwell
2 N CENTRAL AVE
SUITE 1600
PHOENIX, AZ 85004

FOR CONSTRUCTION

Registered Professional Engineer CERTIFICATE 43859 THERESA C. MULLER Date Signed 08/11/23 ARIZONA, U.S.A. Not Valid

CITY OF PRESCOTT ARIZONA

ZONE 41 PUMP STATION, TANK AND PIPELINE

REVISIONS		
REV	DATE	DESCRIPTION

LINE IS 2 INCHES AT FULL SIZE

DESIGNED:	TM
DRAWN:	SCP
CHECKED:	TM
CHECKED:	TM
APPROVED:	TM

FILENAME 152624-MH-100.DWG
BC PROJECT NUMBER 152624
CLIENT PROJECT NUMBER 17-009

HVAC

FLOOR PLAN AND AIR FLOW SCHEMATICS

DRAWING NUMBER
MH-100

SHEET NUMBER
55 OF 84

COP1.png PLOT DATE: 8/11/2023 10:54 AM CAD USER: ANSON COX
Path: C:\BCPW\D0474246 FILENAME: 152624-MH-100.DWG

RACEWAYS

HH23 — MANHOLE (MH), HANDHOLE (HH), PULLBOX (PB)

JB1900 (J) — JUNCTION BOX. OPTIONAL IDENTIFIER

TB-1301 (T) — TERMINAL BOX. OPTIONAL IDENTIFIER

PBD-1900-1,3,5 — HOME RUN EXPOSED - SEE PANELBOARD, SWITCHBOARD, OR MCC SCHEDULE FOR CIRCUIT INFORMATION

EXAMPLE: HOME TO PANELBOARD PBD-1900, CIRCUITS 1, 3, AND 5

PBD-1900-1,3,5 — HOME RUN CONCEALED - SEE PANELBOARD, SWITCHBOARD, OR MCC SCHEDULE FOR CIRCUIT INFORMATION.

EXAMPLE: HOME TO PANELBOARD PBD-1900, CIRCUITS 1, 3, AND 5

CABLE TRAY MODIFIERS:
CTS - 24VDC OR LESS
CTC - 120V CONTROL CONDUCTORS
CTP - 600V POWER CONDUCTORS

CABLE #4/0 AND LARGER SHALL NOT BE STACKED VERTICALLY

WHEN TWO TRAY MODIFIERS IDENTIFY A SINGLE TRAY, THE CONTRACTOR MAY USE DIVIDER OR INSTALL SEPARATE TRAYS (CTC/CTS)

CABLE TRAY WITH COVER MODIFIER, AS ABOVE

P 05P1100 — RACEWAY IDENTIFIER

RACEWAY EXPOSED
MODIFIERS FOR RACEWAY TYPE:
H - POWER (ABOVE 600V)
P - POWER
C - CONTROL
S - SIGNAL
D - DATA
F - FIBER OPTIC
PC - POWER AND CONTROL
X - SPARE

RACEWAY CONCEALED

RACEWAY TURNED TOWARD THE THE VIEWER

RACEWAY TURNED DOWN

CONDUIT CAPPED

DB 05P1100 — DUCT BANK IDENTIFIER (OPTIONAL)

DB — DUCT BANK, DIRECT BURIED

CDB — DUCT BANK, CONCRETE ENCASED

RC — DUCTBANK, REINFORCED CONCRETE ENCASED

OHE — OVERHEAD POWER LINE

DISTRIBUTION EQUIPMENT

APPROXIMATE SHAPE AND SCALE REPRESENTED WHERE POSSIBLE. HOWEVER, EXACT SIZE AND NUMBER OF SECTIONS IS ESTIMATED

FLOOR-STANDING DISTRIBUTION ASSEMBLY, SUCH AS A SWITCHBOARD, TRANSFORMER, OR MOTOR CONTROL CENTER

MCC-1200 — EQUIPMENT DESIGNATION (EXAMPLE)

WALL-MOUNTED DISTRIBUTION ASSEMBLY, SUCH AS PANELBOARD, MOTOR STARTER PANEL, OR TERMINAL CABINET

PBD-1900 — EQUIPMENT DESIGNATION (EXAMPLE)

LIGHTING

FIXTURE IDENTIFIER:

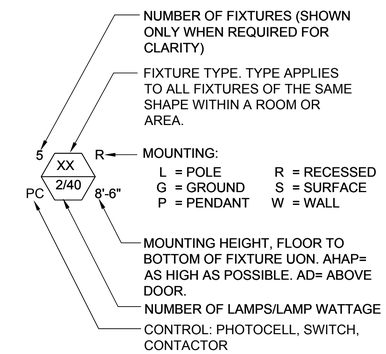

NUMBER OF FIXTURES (SHOWN ONLY WHEN REQUIRED FOR CLARITY)

FIXTURE TYPE. TYPE APPLIES TO ALL FIXTURES OF THE SAME SHAPE WITHIN A ROOM OR AREA.

MOUNTING:
L = POLE R = RECESSED
G = GROUND S = SURFACE
P = PENDANT W = WALL

MOUNTING HEIGHT, FLOOR TO BOTTOM OF FIXTURE UON. AHAP= AS HIGH AS POSSIBLE. AD= ABOVE DOOR.

NUMBER OF LAMPS/LAMP WATTAGE

CONTROL: PHOTOCELL, SWITCH, CONTACTOR

LIGHTING FIXTURE SHAPES AND SCALE ARE REPRESENTED WHERE POSSIBLE. THE EXAMPLES SHOWN BELOW ARE TYPICAL APPLICATIONS

RECESSED FLUORESCENT FIXTURE

SUSPEND PENDANT MOUNTED FIXTURE

SURFACE MOUNTED FIXTURE

NS — EMERGENCY LIGHTING FIXTURES, FIXTURES WITH EMERGENCY BALLAST'S, AND FIXTURES IDENTIFIED WITH AN 'NS' SHALL BE PROVIDED WITH NON-SWITCHED POWER SOURCE

E — FLUORESCENT FIXTURE WITH EMERGENCY BATTERY PACK

LIGHT FIXTURE

WALL MOUNTED FIXTURE

DIRECTIONAL LIGHT

POLE MOUNTED AREA LIGHT

EMERGENCY LIGHTING UNIT SELF CONTAINED

LIGHTING CONTINUED

EXIT LIGHTS:

SURFACE ON CEILING

WALL MOUNTED

WITH DIRECTIONAL ARROWS

3a — CIRCUIT IDENTIFIER: WHEN SHOWN ADJACENT TO FIXTURE IDENTIFIES CIRCUIT NUMBER AND SWITCH. EXAMPLE: CIRCUIT 3, CONTROLLED BY SWITCH a

PC — PHOTO CELL

OS — OCCUPANCY SENSOR

WIRING DEVICES

SWITCHES:

UNLESS OTHERWISE NOTED, ALL SWITCHES ARE WALL MOUNTED

$ — TOGGLE SWITCH, SINGLE POLE

$ $ — GANGED SWITCHES IN COMMON BOX WITH COMMON WALL PLATE

$a,3 — SUPERSCRIPT INDICATES CIRCUIT CONTROLLED: a, b, c, ETC. MAY BE COMBINED WITH CIRCUIT NUMBER. EXAMPLE: 1a, 4b, ETC

SUBSCRIPT MODIFIER INDICATES:
2 = DOUBLE POLE
3 = THREE WAY
4 = FOUR WAY
K = KEY OPERATED
MC = MOMENTARY CONTACT, THREE POSITION
MS = MANUAL (MOTOR) STARTER OR SWITCH WITH OVERLOADS
R = RHEOSTAT (DIMMER, SPEED CONTROL)
O = OCCUPANCY SWITCH

D — DIMMER

RECEPTACLES:

DUPLEX RECEPTACLE

WP — RECEPTACLE MODIFIERS:
WP = WEATHER PROOF

GFI = GROUND FAULT CIRCUIT INTERRUPTER

H = HAZARDOUS AREA-EXPLOSION PROOF

EXPLOSION PROOF, CLASS 1, DEAD FRONT, 45° ANGLE, TWO GANG

RECESSED FLOOR RECEPTACLE-- ANY RECEPTACLE INSIDE A SQUARE

SURFACE FLOOR RECEPTACLE-- ANY RECEPTACLE INSIDE A TRIANGLE

GANGED RECEPTACLES--IN COMMON BOX, WITH COMMON WALL PLATE

RECEPTACLE, CLOCK HANGER

RECEPTACLE, DUPLEX ON EMERGENCY

480V RECEPTACLE

GROUNDING

GROUND ROD

GROUND ROD WITH GROUND WELL

GROUND CONNECTION, COMPRESSION TYPE, EXOTHERMIC. SEE SPECIFIC

G — GROUNDING CONDUCTOR

GROUND CONNECTION

GROUND CONNECTION TO STRUCTURAL REINFORCEMENT

LIGHTNING ROD/AIR TERMINAL

MOTORS AND EQUIPMENT

MOTOR STARTER, INDIVIDUAL. NOT LOCATED IN AN MCC OR SIMILAR GROUP ASSEMBLY

COMBINATION MOTOR STARTER. NOT LOCATED IN AN MCC OR SIMILAR GROUP ASSEMBLY

60 — DISCONNECT SWITCH, NON-FUSED EXAMPLE: 60 AMP

F 100/2/80 — DISCONNECT SWITCH, FUSED EXAMPLE: 100 AMP, 2P, 80 AMP FUSES

M — MOTOR

SV — SOLENOID VALVE

H — HEATER

T — THERMOSTAT

WH — WATER HEATER

FIELD INSTRUMENT

LOCAL CONTROL STATION

LCP-0001 — EQUIPMENT DESIGNATION

CONTROL PANEL, VFD, RVSS, APPROXIMATE SHAPE AND SCALE.

AREA IDENTIFICATION

CI-D1 — HAZARDOUS AREA CLASSIFICATION

CI-D2 — HAZARDOUS AREA CLASSIFICATION

TELEPHONE & COMMUNICATION SYSTEMS

UNLESS OTHERWISE NOTED, TELEPHONE OUTLETS SHALL BE MOUNTED AT SAME HEIGHT AS THE RECEPTACLES. VERIFY

A — EXTERNAL LINE OR PLANT PHONE SYSTEM OUTLET

OPTIONAL MODIFIERS:
A = ATTENDANT'S CONSOLE
F = FUTURE INSTRUMENT
J = JACK, PLUG-IN TYPE
W = WALL INSTRUMENT

BELL

D — OUTLET, DATA COMMUNICATION

SECURITY CAMERA

SPEAKER

H — AUDIBLE HORN

B — STROBE LIGHT (BLUE SHOWN)

CS — ELECTRONIC CARD SWIPE

SD — SMOKE DETECTOR

R — RATE-OF-RISE DETECTOR

CIRCUIT IDENTIFICATION

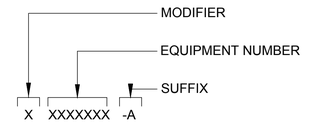

NOTE:

MODIFIERS FOR CABLE TYPE INCLUDE:
H - POWER (ABOVE 600V)
P - POWER
C - CONTROL
S - SIGNAL
D - DATA
F - FIBER OPTIC
PC - POWER AND CONTROL
X - SPARE

SUFFIX:
A - LETTER TO CREATE UNIQUE ID

EXAMPLE 1: P101-1: 3 #2/0, #6G, 2"C	FOR CIRCUIT P101: THREE NO, 2/0 CONDUCTORS, ONE NO. 6 AWG GROUND WIRE IN A 2" CONDUIT
EXAMPLE 2: SES-2: 2[3 #1/0, #6G, 1 1/2"C]	FOR SES-2: TWO PARALLEL RUNS OF THREE NO. 1/0 CONDUCTORS, ONE NO. 6 AWG GROUND IN 1 1/2" CONDUIT
EXAMPLE 3: C111: 2-1 PR #16S, 1"C	FOR CONTROL CIRCUIT: TWO SIGNAL CABLES OF #16 AWG TWISTED SHIELDED PAIR IN 1" C.
VND, 1"C	VENDOR CABLE, 1"C (CONDUIT BY CONTRACTOR) TYP

GENERAL NOTES:

1. SYMBOLS AND ABBREVIATION DRAWINGS ARE GENERAL IN NATURE. SOME SYMBOLS SHOWN HEREON MAY NOT BE USED ON THE CONTRACT DRAWINGS
2. SYMBOLS ARE ARRANGED ON SPECIFIC DRAWINGS AND IN CATEGORIES FOR CONVENIENCE ONLY; SYMBOLS MAY BE USED ON ANY OF THE CONTRACT DRAWINGS
3. IDENTIFICATIONS (ID), SIZES, RATINGS, LOCATIONS AND SIMILAR INFORMATION SHOWN ASSOCIATED WITH SYMBOLS ARE OPTIONAL; EXAMPLES OF SUCH INFORMATION ARE SHOWN WITH SOME SYMBOLS FOR CLARITY

Brown AND Caldwell
2 N CENTRAL AVE
SUITE 1600
PHOENIX, AZ 85004

FOR CONSTRUCTION

Registered Professional Engineer (Civil) CERTIFICATE NO. 36697 KENNETH W. CHANDLER Date Signed 01/14/22 ARIZONA, U.S.A.

CITY OF PRESCOTT ARIZONA

ZONE 41 MINGUS PUMP STATION, TANK AND PIPELINE

REVISIONS		
REV	DATE	DESCRIPTION

LINE IS 2 INCHES AT FULL SIZE

DESIGNED:	FRF
DRAWN:	CJR
CHECKED:	KWC
CHECKED:	HWP
APPROVED:	TCM

FILENAME 152624-E-001.DWG
BC PROJECT NUMBER 152624
CLIENT PROJECT NUMBER 17-009

ELECTRICAL

LEGEND AND SYMBOLS SHEET 1

DRAWING NUMBER
E-001
SHEET NUMBER 56 OF 84

Path: C:\BCPW\D0474241 FILENAME: 152624-E-001.DWG PLOT DATE: 7/27/2022 11:50 AM CAD USER: CHRISTOPHER RESOP
COP1.png

CONTROL DIAGRAM SYMBOLS

GENERAL

- CONDUCTORS CONNECTED
- CONDUCTORS NOT CONNECTED
- TERMINAL POINT FOR EXTERNAL CONNECTIONS
- EXISTING EQUIPMENT (SCREENED)

INDICATING LIGHTS

INDICATING LIGHTS

L = LENS COLOR:
A = AMBER
B = BLUE
G = GREEN
R = RED
W = WHITE

LINE — PUSH TO TEST. TEST VOLTAGE TERMINAL SHOWN

PUSHBUTTONS

- HS–XXXX — PUSHBUTTON, MOMENTARY CONTACT, NORMALLY OPEN
- HS-XXXX — PUSHBUTTON, MOMENTARY CONTACT, NORMALLY CLOSED
- HS–XXXX — PUSHBUTTON WITH MUSHROOM HEAD, EMERGENCY STOP,

SELECTOR SWITCHES

HS-XXXX (1, 2) — OX
2 POSITION MAINTAINED CONTACT
X = CONTACTS CLOSED
O = CONTACTS OPEN

HS-XXXX (1, 2) — XO, OX
2 POSITION
SPRING RETURNED TO RIGHT
O = CONTACTS OPENED
X = CONTACTS CLOSED

HS-XXXX (H, O, A) — OXO, XOO
3 POSITION MAINTAINED CONTACT
X = CONTACTS CLOSED
O = CONTACTS OPENED

CONTROL RELAYS

- CR 2 / FUNCTION — OPERATING COIL
  CR = CONTROL RELAY
  U = UNLATCH
  L = LATCH
- OL — OVERLOAD RELAY
- CR2 (LINE) CR2 (LINE) — OUTPUT CONTACTS. LINE NUMBER OF RELAY COIL SHOWN (OPTIONAL)

INPUT SWITCHES

NORMALLY OPEN	NORMALLY CLOSED	INITIATING VARIABLE
SS	SS	SPEED
TS	TS	TEMPERATURE
WS	WS	FORCE OR TORQUE
ZS	ZS	POSITION (LIMIT)
FS	FS	FLOW
LS	LS	LEVEL
PS	PS	PRESSURE

TIMING RELAYS

- TR 3 — OPERATING COIL
  ON or OFF DELAY
  RANGE:SEC/MIN
  SET:SEC/MIN
- NORMALLY OPEN: TR3 OR TC (LINE) — NORMALLY CLOSED: TR3 OR TO (LINE) — DELAY ON COIL ENERGIZATION (ON DELAY)
- NORMALLY OPEN: TR3 OR TO (LINE) — NORMALLY CLOSED: TR3 OR TC (LINE) — DELAY ON COIL DE-ENERGIZATION (OFF DELAY)

CONTACTORS

- ID — OPERATING COILS
  C = CONTACTOR, LIGHTING OR GENERAL USE
  F = FAST OR FORWARD
  M = MAIN OR LINE
  1M = FIRST MAIN OR WYE
  2M = SECOND MAIN OR DELTA
  R = RUN OR REVERSE
  S = SLOW OR START
  IC = ISOLATION CONTROL
- ID / SIZE X — MAIN CONTACTS
  MAIN CONTACTS AIR BREAK, NEMA SIZE OPTIONAL
- M / SIZE 3 — VACUUM CONTACTOR, NEMA SIZE OPTIONAL.

MISCELLANEOUS

- FU 2B / 15 AMP — FUSE WITH SIZE AND OPTIONAL IDENTIFICATION
- FU 3/15 AMP — FUSE WITH BLOWN FUSE INDICATOR
- 480V / 120V, 250VA — CONTROL TRANSFORMER PRIMARY AND SECONDARY SHOWN SIZE AS SHOWN OR AS SPECIFIED
- 50/5 (3) — CURRENT TRANSFORMER. PRIMARY TURNS RATIO SHOWN (OPTIONAL)
- 250 OHM RES — RESISTOR
- RECTIFIER
- SURGE OR ARC SUPPRESSOR
- KVAR — CAPACITOR
- CONNECTOR
- XX — INCOMING LINE POWER SUPPLY
- DRAWOUT MECHANISM
- SOLENOID VALVE
- BUS DUCT
- GROUND CONNECTION
- POTENTIOMETER
- METER WITH ALPHA IDENTIFIERS:
  H = ELAPSED TIME
  A = AMMETER
  V = VOLTMETER
- BATTERY
- SHIELDED CABLE
- LOCATED IN FIELD
- AC TERMINAL BLOCK
- DC TERMINAL BLOCK
- XX — PLC I/O POINTS
  DO = DIGITAL OUT SIGNAL
  DI = DIGITAL IN SIGNAL
  AO = ANALOG OUT SIGNAL
  AI = ANALOG IN SIGNAL

ONE LINE DIAGRAM SYMBOLS

- TRIP FRAME / 52 — POWER CIRCUIT BREAKER (AIR, OIL, OR GAS) FRAME AND TRIP SETTING AND OPTIONAL I.D. SHOWN
- TRIP FRAME LSIG — CIRCUIT BREAKER WITH ADJUSTABLE ELECTRONIC TRIP OVER BREAKER FRAME SIZE. SOLID STATE TRIP FEATURES SHOWN:
  L = LONG DELAY
  S = SHORT DELAY
  I = INSTANTANEOUS
  G = GROUND FAULT
- SIZE / TYPE — CIRCUIT BREAKER (TYPE: MCP = MOTOR CIRCUIT PROTECTOR OR 3P = 3-POLE THERMAL MAGNETIC TRIP
- 30A 3P / CLF — FUSED SWITCH: FUSE RATING AND POLES SHOWN
  MODIFIERS:
  CLF = CURRENT LIMITING FUSE
  DE = DUAL ELEMENT
  F = CLASS F
  E = E RATED
- 100F — FUSE. 100 AMP CLASS "F" SHOWN
- ATS # 60A, 3P — POWER TRANSFER SWITCH. DESIGNATION, AMP RATING AND CONFIGURATION SHOWN
  MTS = MANUAL TRANSFER SWITCH
  ATS = AUTOMATIC TRANSFER SWITCH
  SUSE= SUITABLE FOR USE AS SERVICE ENTRANCE
- AIR BREAK CONTACTOR, FVNR U.O.N. NEMA SIZE 1 INDICATED
  FVR = FULL VOLTAGE, REVERSING STARTER
  2S2W = TWO SPEED, TWO WINDING STARTER
- METERING (ANSI/IEEE FUNCTIONS AS SPECIFIED)
  POWER MONITOR (PM) POWER QUALITY MONITOR (HARMONIC ANALYSIS) (PQM) MOTOR MONITOR AND PROTECTION RELAY (MPR) FEEDER PROTECTION RELAY (FPR)
- 5 KVA — PACKAGED EQUIPMENT OR NON-MOTOR LOAD. KVA, KW, AMPS AS NOTED.
- XXHP ##AMPS — VARIABLE FREQUENCY DRIVE, (VFD) NORMAL DUTY UON. HP IS INDICATED IF DIFFERENT THAN DRIVEN LOAD HP.
  ##AMPS=RATED CONTINUOUS AMPS
- RVSS — REDUCED VOLTAGE SOLID STATE STARTER
- SPD — SURGE PROTECTION DEVICE
- 64 N / 3 — ANSI C37.2 DEVICE. QUANTITIES SHOWN.

- 600kW G 480V / 60 Hz 3ph, 4w — GENERATOR WITH WINDING CONFIGURATION VOLTAGE, POWER, FREQUENCY SHOWN. POWER FACTOR OPTIONAL
- 5 — MOTOR, HORSEPOWER SHOWN
- 55 KVAR — POWER FACTOR CORRECTION CAPACITOR. KVAR RATING INDICATED
- POTHEAD
- STRESS CONE
- INDICATES THAT ALL OR PART OF CONDUIT MAYBE ROUTED IN DUCT BANK OR UNDERGROUND
- PORTABLE CABLE
- CABLE BUS
- BUS CONDUCTOR
- CABLE CONDUCTOR
- SURGE ARRESTOR/CAPACITOR
- LIGHTNING ARRESTOR AND GROUND
- TEST DEVICE
- 200A — DISCONNECT OR ISOLATING SWITCH. 200 AMP SHOWN
- 480 V 30KVA 5% Z / 208/120V — POWER TRANSFORMER. VOLTAGES, SIZE, IMPEDANCE SHOWN
- 1.5 KVA 480 V / 2.5% Z 480 V — ISOLATION TRANSFORMER. VOLTAGES, SIZE, IMPEDANCE SHOWN
- 3 / 480V - 120V — POTENTIAL TRANSFORMER. PT QUANTITY (3) AND VOLTAGES SHOWN
- 250/5 3 — CURRENT TRANSFORMER. CT QUANTITY AND 250:5 TURNS RATIO SHOWN

WINDING CONFIGURATIONS:
- DELTA
- WYE (GROUNDED)
- K — KIRK KEY INTERLOCK
- 50 AMP/ 10 SEC GDR — NEUTRAL GROUNDING RESISTOR. AMPS/TIME RATING SHOWN

Brown AND Caldwell
2 N CENTRAL AVE
SUITE 1600
PHOENIX, AZ 85004

FOR CONSTRUCTION

Certified Professional Engineer — CERTIFICATE NO. 36697 — KENNETH W. CHANDLER — Date Signed 01/14/22 — ARIZONA, U.S.A.

CITY OF PRESCOTT ARIZONA

ZONE 41 MINGUS PUMP STATION, TANK AND PIPELINE

REVISIONS

REV	DATE	DESCRIPTION

LINE IS 2 INCHES AT FULL SIZE

DESIGNED:	FRF
DRAWN:	CJR
CHECKED:	KWC
CHECKED:	HWP
APPROVED:	TCM

FILENAME 152624-E-002.DWG
BC PROJECT NUMBER 152624
CLIENT PROJECT NUMBER 17-009

ELECTRICAL

LEGEND AND SYMBOLS SHEET 2

DRAWING NUMBER
E-002
SHEET NUMBER 57 OF 84

Path: C:\BCPW\D0474241 FILENAME: 152624-E-002.DWG PLOT DATE: 7/27/2022 11:50 AM CAD USER: CHRISTOPHER RESOP COP1.png

ABBREVIATIONS

NOTES:
1. ABBREVIATIONS SHOWN ON ELECTRICAL DRAWINGS ARE IN ACCORDANCE WITH ASME STANDARD Y14.38A
2. ABBREVIATIONS ON THIS SHEET ARE IN ADDITION TO THE ABBREVIATIONS DEFINED ON OTHER DRAWINGS.
3. ABBREVIATIONS HERE IN SHALL TAKE PRECEDENCE IN CASE OF CONFLICT.
4. ABBREVIATIONS ARE NOT EQUIPMENT NUMBERING PREFIXES LISTED ON OTHER DRAWINGS.

A, AMP	AMP(S), AMPERE(S)
AC	ALTERNATING CURRENT
AFF	ABOVE FINISHED FLOOR
AHAP	AS HIGH AS POSSIBLE
AIC	AMPS INTERRUPTING CAPACITY, SYMM.
AL	ALUMINUM
ARCH	ARCHITECT(URAL)
ASYM	ASYMMETRICAL
ATS	AUTOMATIC TRANSFER SWITCH
AUTO	AUTOMATIC
AUX	AUXILIARY
AWG	AMERICAN WIRE GAUGE
BC	BARE COPPER
BLDG	BUILDING
BOT	BOTTOM
C	CONDUCTOR, CONDUIT
CB	CIRCUIT BREAKER
CKT	CIRCUIT
CLG	CEILING
CM	CENTIMETERS
CND	CONDUIT
CNTL	CONTROL
C.O.	CONDUIT ONLY, SPARE
CONC	CONCRETE
CPT	CONTROL POWER TRANSFORMER
CT	CURRENT TRANSFORMER
CU	COPPER
DB	DUCT BANK, DIRECT BURIAL
DC	DIRECT CURRENT, DATA CABLE
DCU	DISTRIBUTED CONTROL UNIT
DET	DETAIL
DIAG	DIAGRAM
DISC	DISCONNECT
DWG	DRAWING
EA	EACH
EC	EMPTY CONDUIT
ECP	EQUIPMENT CONTROL PANEL
EDB	ELECTRICAL DUCTBANK
EG	ENGINE GENERATOR SET
EL	ELEVATION
ELEC	ELECTRIC(AL)
EMH	ELECTRICAL MANHOLE
EMER	EMERGENCY
ENCL	ENCLOSURE/ENCLOSED
EPB	ELECTRICAL PULLBOX
ETM	ELAPSED TIME METER
EP	EXPLOSION PROOF
EQUIP	EQUIPMENT
EX	EXISTING
FDR	FEEDER
FL	FLUORESCENT
FLA	FULL LOAD AMPS
FLEX	FLEXIBLE CONDUIT
F.O.	FAIL OPEN
FO	FIBER OPTIC
FUT	FUTURE
GDR	GROUNDING RESISTOR
GEC	GROUND ELECTRODE CONDUCTOR
GF	GROUND FAULT
GFI	GROUND FAULT INTERRUPTER
GND, G	GROUND
GRS	GALVANIZED RIGID STEEL

H	HIGH
HGT	HEIGHT
HH	HANDHOLE
HID	HIGH INTENSITY DISCHARGE
HMI	HUMAN MACHINE INTERFACE
HP	HORSEPOWER
HPS	HIGH PRESSURE SODIUM
HTR	HEATER
HV	HIGH VOLTAGE
HVAC	HEATING, VENTILATION, AND AIR CONDITIONING
HZ	HERTZ (CYCLES PER SECOND)
ICOM	NTERCOM
ID	INSIDE DIAMETER
IMC	INTERMEDIATE METAL CONDUIT
INCAND	INCANDESCENT
INTLK	INTERLOCK
INST	INSTANTANEOUS
I/O	INPUT-OUTPUT
IPB	INSTRUMENT PULLBOX
JB	JUNCTION BOX
KCMIL	1000 CIRCULAR MIL
KV	KILOVOLT
KVA	KILOVOLT-AMPERE
KVAR	KILOVOLT-AMPERE REACTIVE
KW	KILOWATT
KWH	KILOWATT-HOUR
L	LONG
LC	LIGHTING CONTACTOR
LCP	LOCAL CONTROL PANEL
LCS	LOCAL CONTROL STATION
LED	LIGHT EMITTING DIODE
LHH	LOW VOLTAGE HANDHOLE
LMH	LOW VOLTAGE MANHOLE
LP	LIGHTING PANEL
LT	LONG TIME
LTG	LIGHTING
LV	LOW VOLTAGE
M	METER
MA	MILLIAMPERE
MBS	MANUAL BYPASS SWITCH
MCC	MOTOR CONTROL CENTER
MCP	MOTOR CIRCUIT PROTECTOR
MPC	MINI POWER CENTER
MECH	MECHANICAL
MFR	MANUFACTURE(R)
MH	MANHOLE, METAL HALIDE
MIC	MICROPHONE
MIS	MANAGEMENT INFORMATION STATION
MISC	MISCELLANEOUS
MM	MILLIMETER
MMH	MEDIUM VOLTAGE MANHOLE
MOV	MOTOR OPERATED VALVES
MTS	MANUAL TRANSFER SWITCH
MV	MILLIVOLT, MEDIUM VOLTAGE
MVMC	MEDIUM VOLTAGE MOTOR CONTROL
N/A	NOT APPLICABLE
N.C.	NORMALLY CLOSED
NEUT, N	NEUTRAL NEUT,N
NF	NON-FUSED
NIC	NOT IN CONTRACT
N.O.	NORMALLY OPEN
NO.	NUMBER
NOM	NOMINAL
NP	NAMEPLATE

NTS	NOT TO SCALE
OC	ON CENTER
OCC	OPERATION CONTROL CENTER
OD	OUTSIDE DIAMETER
OH	OVERHEAD
OIS	OPERATOR INTERFACE STATION
OT	OIL TIGHT
OWS	OPERATOR WORKSTATION
P	POLE, PHASE
PBD	PANEL BOARD
PB	PUSHBUTTON, PULLBOX
PCP	PROCESS CONTROL PANEL
PF	POWER FACTOR
PH	PHASE
PLC	PROGRAMMABLE LOGIC CONTROLLER
PMM	POWER METERING MODULE
PNL	PANEL
PP	POWER PANEL
PR	PAIR
PRI	PRIMARY
PT	POTENTIAL TRANSFORMER
PVC	POLYVINYL CHLORIDE
PWR	POWER
QSB	QUARTZ STANDBY
RCPT	RECEPTACLE
REF	REFERENCE
REQD	REQUIRED
RE STL	REINFORCING STEEL
RMS	ROOT MEAN SQUARE
RTD	RESISTANCE TEMPERATURE DETECTOR
RTU	REMOTE TERMINAL UNIT
RVSS	REDUCED VOLTAGE SOLID STATE STARTER
SA	SURGE ARRESTOR
SCR	SILICON CONTROLLED RECTIFIER
SD	SMOKE DETECTOR
SEC	SECONDARY
SEL	SELECTOR
SHH	SIGNAL HANDHOLE
SMH	SIGNAL MANHOLE
SPEC	SPECIFICATION
SPD	SURGE PROTECTION DEVICE
SPKR	SPEAKER
ST	SHORT TIME
STP	SHIELDED TWISTED PAIR
SUB	SUBSTATION
SW	SWITCH
SWBD	SWITCHBOARD
SWGR	SWITCHGEAR
SYMM	SYMMETRICAL
SYS	SYSTEM
TB	TERMINAL BOX
TEL	TELEPHONE
TEMP	TEMPERATURE
TFR	TRANSFORMER
TRI	TRIAD
TV	TELEVISION
TVSS	TRANSIENT VOLTAGE SURGE SUPPRESSOR
TYP	TYPICAL
U/G	UNDERGROUND
UON	UNLESS OTHERWISE NOTED
UPS	UNINTERRUPTABLE POWER SUPPLY
V	VOLT
VA	VOLTAMPERE
VAR	VOLTAMPERE REACTIVE
VC	VACUUM CONTACTOR
VCP	VENDOR CONTROL PANEL
VND	VENDOR
W	WATT, WIRE, WIDE
W/	WITH
W/O	WITHOUT
WW	WIREWAY
WG	WITH GROUND
WP	WEATHERPROOF
XFMR	TRANSFORMER
XMTR	TRANSMITTER
XP	EXPLOSION PROOF
Z	IMPEDANCE

GENERAL NOTES:

1. THE ELECTRICAL DRAWINGS USE THE ONE LINE DIAGRAMS AND RISER DIAGRAMS AND PANEL SCHEDULES IN CONJUNCTION WITH SHOWING THE LOCATION OF THE ELECTRICAL/INSTRUMENTATION SOURCES AND LOADS/DEVICES SHOWN ON THE PLAN DRAWINGS TO DEPICT THE WORK. THE CONTRACTOR SHALL USE THESE DOCUMENTS TO DETERMINE AND PROVIDE THE NECESSARY RACEWAY AND WIRING SYSTEM FOR EACH CIRCUIT. ALL INDOOR RACEWAY SHALL BE RUN EXPOSED AND ROUTED BY THE CONTRACTOR, UNLESS OTHERWISE NOTED. THE TYPE OF RACEWAY AND WIRE USED SHALL BE AS SPECIFIED.
2. IF EQUIPMENT SUPPLIED BY MANUFACTURER HAS A LARGER LOAD THAN INDICTED ON THE SINGLE LINE DIAGRAM, THE CONSTRUCTION MANAGER SHALL BE NOTIFIED. THE CABLE, CONDUIT AND ELECTRICAL EQUIPMENT SHALL BE SIZED AS REQUIRED, TO ACCOMMODATE THE HIGHER VALUE.
3. IN AREAS WHERE THERE ARE OVERHEAD BRIDGE CRANES, HOISTS, ETS., OR WHERE EQUIPMENT IS LIFTED AND MOVED FOR MAINTENANCE OR REPLACEMENT, NO CONDUITS SHALL BE RUN OVERHEAD THAT WILL INTERFERE WITH THE OPERATION OF THE EQUIPMENT OR ACCESS TO EQUIPMENT.
4. THE LOCATION OF THE CONTROL STATIONS SHOWN ON THE PLAN DRAWINGS ARE DIAGRAMMATIC ONLY. THE ACTUAL LOCATION SHALL BE COORDINATED IN THE FIELD WITH THE CONSTRUCTION MANAGER AND ADJACENT EQUIPMENT SUCH AS PIPING, PROCESS EQUIPMENT, ETC.
5. THE CONTRACTOR SHALL COORDINATE WITH THE STRUCTURAL AND MECHANICAL DRAWINGS FOR CONDUIT STUB UP AND TERMINATION LOCATIONS.

Brown AND Caldwell
2 N CENTRAL AVE
SUITE 1600
PHOENIX, AZ 85004

FOR CONSTRUCTION

Registered Professional Engineer (Civil) CERTIFICATE NO. 36697 KENNETH W. CHANDLER Date Signed 01/14/22 ARIZONA, U.S.A.

CITY OF PRESCOTT ARIZONA

ZONE 41 MINGUS PUMP STATION, TANK AND PIPELINE

REVISIONS

REV	DATE	DESCRIPTION

LINE IS 2 INCHES AT FULL SIZE

DESIGNED:	FRF
DRAWN:	CJR
CHECKED:	KWC
CHECKED:	HWP
APPROVED:	TCM

FILENAME
152624-E-003.DWG
BC PROJECT NUMBER
152624
CLIENT PROJECT NUMBER
17-009

ELECTRICAL

ABBREVIATIONS

DRAWING NUMBER
E-003
SHEET NUMBER
58 OF 84

Path: C:\BCPW\D0474241 FILENAME: 152624-E-003.DWG PLOT DATE: 7/27/2022 11:50 AM CAD USER: CHRISTOPHER RESOP
COP1.png

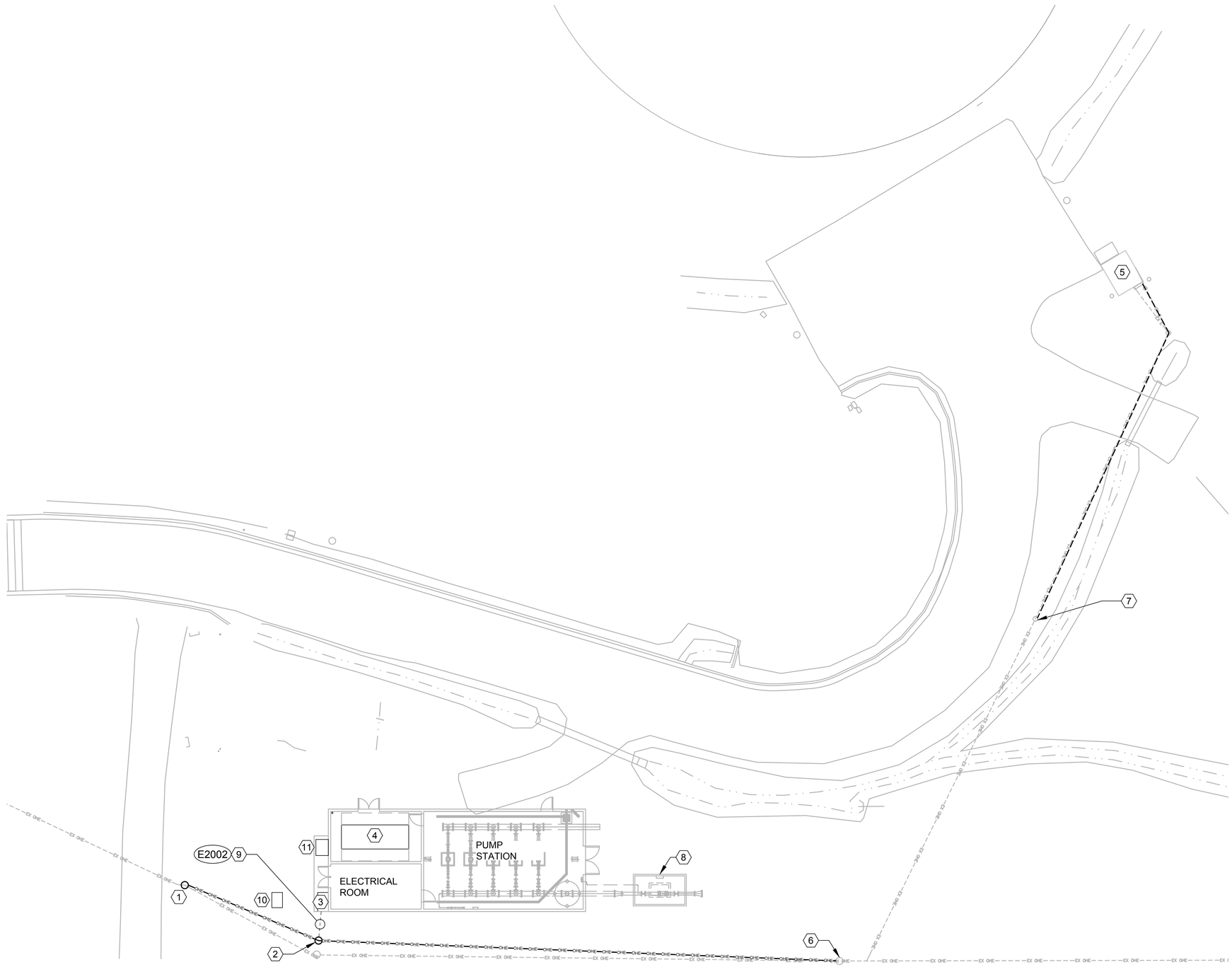

SITE PLAN

0 15 30

SCALE: 1" = 15'-0"

GENERAL NOTES

1. ADDRESS: 1821 WILLOW CREEK ROAD PRESCOTT, AZ.
2. COORDINATE ALL DEMO AND SHUTDOWN ACTIVITIES WITH CITY OF PRESCOTT PRIOR TO PERFORMING WORK.
3. APS CONTACT: MONIQUE HOLLIDAY (928) 443-6612.
4. COORDINATE EXACT LOCATION OF UNDERGROUND UTILITY WITH APS DESIGN DOCUMENTS.
5. STANDBY GENERATOR AREA SHALL BE CONSTRUCTED AFTER REPLACEMENT PUMP STATION AND ELECTRICAL ROOM ARE OPERATING, AND EXISTING PUMP STATION IS DEMOLISHED.

KEY NOTES

1. EXISTING APS POLE MOUNTED TRANSFORMER FOR EXISTING PUMP STATION. REMOVE TRANSFORMER AND UNDERGROUND CONDUCTORS ONCE NEW PUMP STATION IS OPERATIONAL.
2. APS TO PROVIDE POLE AND POLE MOUNTED APS TRANSFORMER. CONTRACTOR TO INSTALL CONDUIT PER APS SERVICE GUIDELINES.
3. SERVICE ENTRANCE SECTION SES-3190
4. GENERATOR GEN3192
5. EXISTING NORTH TANKS RTU BUILDING
6. EXISTING POLE MOUNTED TRANSFORMER FOR NORTH TANKS RTU, OVERHEAD UTILITY CONDUCTORS.
7. COORDINATE WITH OWNER AND APS TO REPLACE OVERHEAD UTILITY WITH UNDERGROUND FROM EXISTING POLE TO NORTH TANKS RTU BUILDING. CONTRACTOR SHALL PROVIDE NEW DUCTBANK AND HANDHOLES FROM EXISTING NORTH TANK RTU BUILDING SERVICE ENTRANCE SECTION TO EXISTING POLE. EXISTING SERVICE ENTRANCE IS UL LISTED FOR BOTTOMFEED AND SHALL BE BOTTOM FED.
8. FE3160 LOCATED IN METER VAULT
9. SES-B
10. GENERATOR CONNECTION PANEL
11. HP-1 AC

Contact Arizona 811 at least two full working days before you begin excavation

ARIZONA811

Call 811 or click Arizona811.com

Brown AND Caldwell

2 N CENTRAL AVE
SUITE 1600
PHOENIX, AZ 85004

FOR CONSTRUCTION

Registered Professional Engineer (Electrical) CERTIFICATE NO. 36697 KENNETH W. CHANDLER Date Signed 03/14/22 ARIZONA, U.S.A.

CITY OF PRESCOTT ARIZONA

ZONE 41 PUMP STATION, TANK AND PIPELINE

REVISIONS

REV	DATE	DESCRIPTION

LINE IS 2 INCHES AT FULL SIZE

DESIGNED: FRF
DRAWN: CJR
CHECKED: KWC
CHECKED: HWP
APPROVED: TCM

FILENAME 152624-E-101.DWG
BC PROJECT NUMBER 152624
CLIENT PROJECT NUMBER 17-009

ELECTRICAL

PUMP STATION SITE PLAN

DRAWING NUMBER

E-101

SHEET NUMBER 59 OF 84

BlueStakeEngineeringLabel.jpg
COP1.png
Path: C:\BCPW\D0474241 FILENAME: 152624-E-101.DWG PLOT DATE: 7/27/2022 11:51 AM CAD USER: CHRISTOPHER RESOP

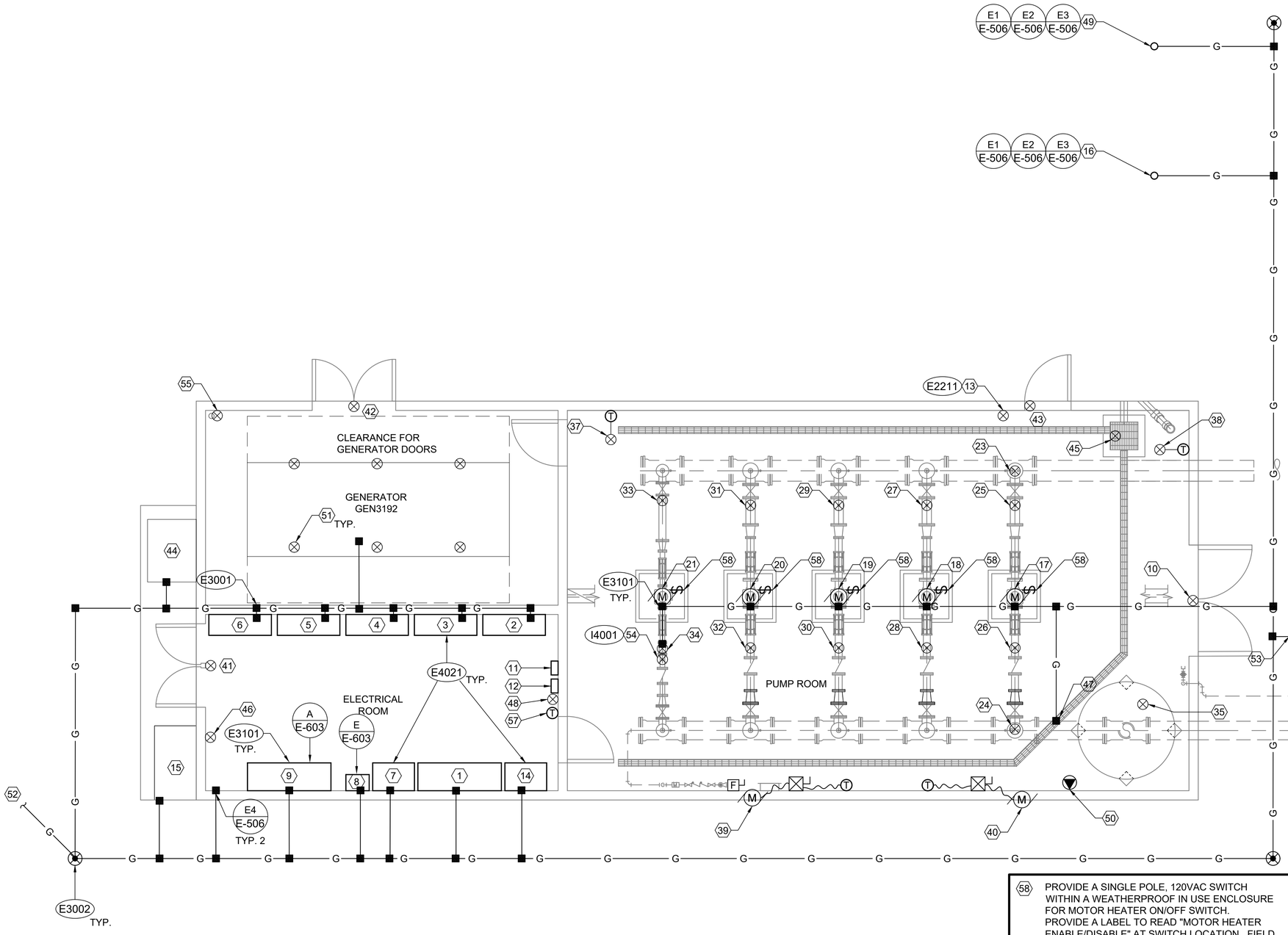

SITE PLAN

N

0 2 4 8

SCALE: 1/4" = 1'-0"

GENERAL NOTES

1. PROVIDE OPERATING PUMP STATION PRIOR TO EXISTING PUMP STATION DEMOLITION. PROVIDE TEMPORARY STANDBY POWER UNTIL STANDBY GENERATOR IS OPERATIONAL.
2. CIRCUITS: DRAWINGS E-601, E-602, AND E-603.
3. DEMOLITION DRAWING D-100.
4. PROVIDE BUILDING LIGHTNING PROTECTION SYSTEM PER SPEC. 26 41 13.
5. SUBMIT CONDUIT LAYOUT PER SPEC. 26 05 00.
6. WORK SEQUENCE: SPEC. 01 12 16 AND 26 05 00.
7. COORDINATE HVAC WITH DRAWING MH-100.

KEY NOTES

1. SWBD3193
2. VFD3110
3. VFD3120
4. VFD3130
5. VFD3140
6. VFD3150
7. TFR3193
8. POWER PANEL PNL3193
9. RTU31
10. ZSC3194D
11. FIT3150
12. FIT3160
13. SECURITY KEYPAD KPD3194
14. ATS3191, ZSC3191B
15. SERVICE ENTRANCE SECTION SES3190, ZSC3190
16. PLC RADIO ANTENNA, POLE TO MASTER SITE
17. PUMP 1 P3110
18. PUMP 2 P3120
19. PUMP 3 P3130
20. PUMP 4 P3140
21. JOCKEY PUMP P3150
22. NOT USED
23. PIT3100
24. PIT3160
25. PSL3110
26. PSH3111
27. PSL3120
28. PSH3121
29. PSL3130
30. PSH3131
31. PSL3140
32. PSH3141
33. PSL3150
34. PSH3151
35. PDIT3181
36. AHU-1 ON ROOF PER MH-100, PROVIDE NEMA 4 FUSIBLE DISCONNECT AND WP GFCI RECEPTACLE
37. UH-1
38. UH-2
39. EF-1, LCP3182
40. EF-2, LCP3183
41. ZSC3194A
42. ZSC3194B
43. ZSC3194C
44. HP-1 AC
45. LSH3101
46. MD-1
47. BOND TO PIPING
48. LIGHTING CONTACTOR
49. MINGUS TANK RTU RADIO ANTENNA, POLE
50. AIR COMPRESSOR AC-1 RECEPTACLE
51. ZSC3192A THROUGH F
52. CONTINUE GROUND TO GENERATOR CONNECTION PANEL. SEE SHEET E-101 FOR LOCATION. TERMINATE IN SLAB PER DETAIL E2111.
53. CONTINUE GROUND TO FLOW METER FE3160 VAULT. GROUND FLOW METER PER DETAIL I4001.
54. FLOW METER FE3150
55. LSH3195
56. NOT USED
57. TIT3194A
58. PROVIDE A SINGLE POLE, 120VAC SWITCH WITHIN A WEATHERPROOF IN USE ENCLOSURE FOR MOTOR HEATER ON/OFF SWITCH. PROVIDE A LABEL TO READ "MOTOR HEATER ENABLE/DISABLE" AT SWITCH LOCATION. FIELD LOCATE AND FIELD WIRE TO 120V MOTOR WINDING HEATER TERMINAL JUNCTION BOX AT THE MOTOR.

Brown AND Caldwell
2 N CENTRAL AVE
SUITE 1600
PHOENIX, AZ 85004

FOR CONSTRUCTION

Registered Professional Engineer (Electrical) CERTIFICATE NO. 36697 KENNETH W. CHANDLER Date Signed 05/31/24 ARIZONA, U.S.A.

CITY OF PRESCOTT ARIZONA

ZONE 41 MINGUS PUMP STATION, TANK AND PIPELINE

REVISIONS

REV	DATE	DESCRIPTION

LINE IS 2 INCHES AT FULL SIZE

DESIGNED:	FRF
DRAWN:	CJR
CHECKED:	KWC
CHECKED:	HWP
APPROVED:	TCM

FILENAME 152624-E-401.DWG
BC PROJECT NUMBER 152624
CLIENT PROJECT NUMBER 17-009

ELECTRICAL

PUMP STATION ENLARGED PLAN

DRAWING NUMBER
E-401

SHEET NUMBER
60 OF 84

Path: C:\BCPW\D0474241 FILENAME: 152624-E-401.DWG PLOT DATE: 5/21/2024 10:22 AM CAD USER: CHRISTOPHER RESOP
COP1.png

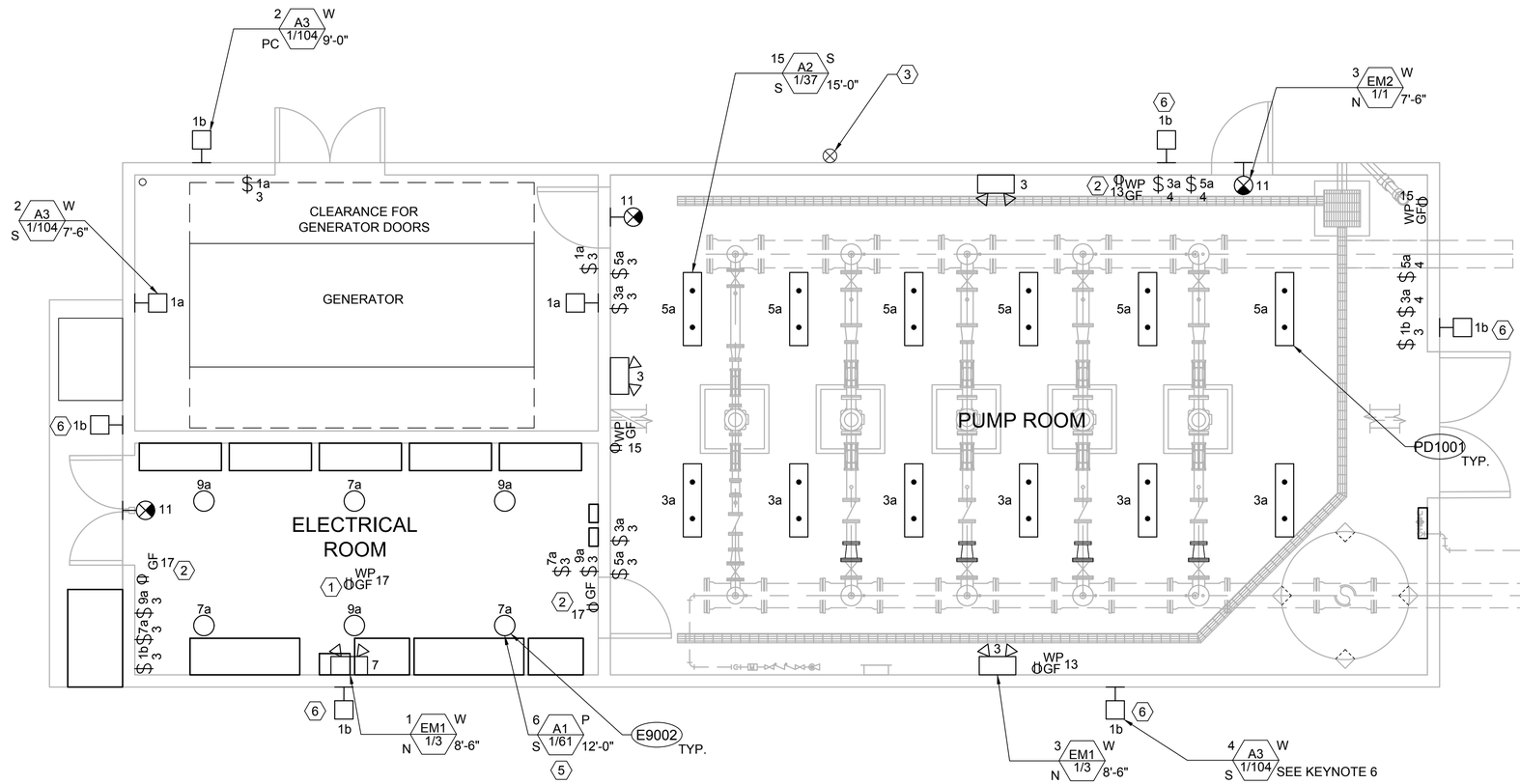

SITE PLAN

SCALE: 1/4" = 1'-0"

GENERAL NOTES

1. LUMINAIRE SCHEDULE: DETAIL F/E-602 .

KEY NOTES

1. MOUNT WEATHERPROOF GROUND-FAULT CIRCUIT INTERRUPT RECEPTACLE ON ROOF ADJACENT TO AIR HANDLING UNIT.
2. MOUNT RECEPTACLE UNDERNEATH LIGHT SWITCHES AT AN ELEVATION OF 18" AFF.
3. PHOTOELECTRIC CELL FOR NORTH SIDE EXTERIOR LIGHTING.
4. NOT USED.
5. OWNER TO PROVIDE FIXTURES A1 FOR ELECTRICAL ROOM FROM SURPLUS INVENTORY. COORDINATE NUMBER OF AVAILABLE FIXTURES WITH THE CITY PRIOR TO ORDERING LIGHTING FOR THE ELECTRICAL ROOM.
6. MOUNT LIGHTING FIXTURE IN EXTERIOR SOFFIT.

Brown AND Caldwell
2 N CENTRAL AVE
SUITE 1600
PHOENIX, AZ 85004

FOR CONSTRUCTION

Registered Professional Engineer (Electrical) CERTIFICATE NO. 36697 KENNETH W. CHANDLER Date Signed 03/1/[illegible] ARIZONA, U.S.A.

CITY OF PRESCOTT ARIZONA

ZONE 41 MINGUS PUMP STATION, TANK AND PIPELINE

REVISIONS		
REV	DATE	DESCRIPTION

LINE IS 2 INCHES AT FULL SIZE

DESIGNED:	FRF
DRAWN:	CJR
CHECKED:	KWC
CHECKED:	HWP
APPROVED:	TCM

FILENAME
152624-E-402.DWG

BC PROJECT NUMBER
152624

CLIENT PROJECT NUMBER
17-009

ELECTRICAL

PUMP STATION LIGHTING PLAN

DRAWING NUMBER
E-402

SHEET NUMBER
61 OF 84

Path: C:\BCPW\D0474241 FILENAME: 152624-E-402.DWG PLOT DATE: 7/27/2022 11:51 AM CAD USER: CHRISTOPHER RESOP COP1.png

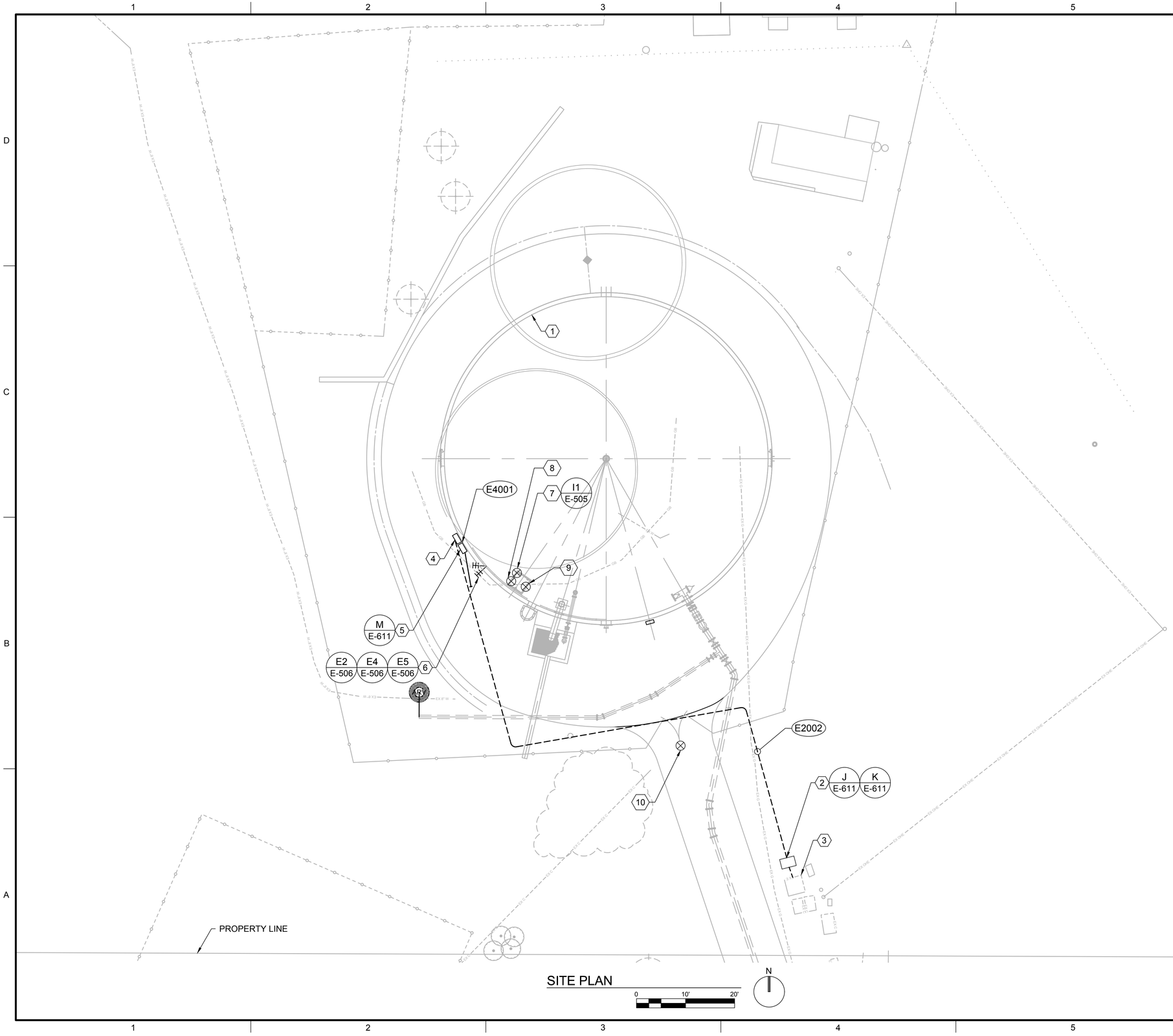

SITE PLAN

GENERAL NOTES

1. ADDRESS: 810 DOUGLAS LN PRESCOTT, AZ.
2. ARIZONA PUBLIC SERVICE POWER UTILITY ADDRESS: CITY TO CONFIRM, 808 DOUGLAS AVENUE.
3. VERIFY EXISTING UTILITY LOCATIONS PRIOR TO CONSTRUCTION.
4. COORDINATE ALL DEMO AND SHUTDOWN ACTIVITIES WITH CITY OF PRESCOTT PRIOR TO PERFORMING WORK.
5. APS CONTACT: MONIQUE HOLLIDAY (928) 443-6612.
6. PROTECT EXISTING TREES DURING CONSTRUCTION.
7. REPLACE EXISTING RTU TO RELAY TANK LEVEL TO MINGUS PUMP STATION. REFER TO SPEC 26 05 00.
8. CIRCUITS: DRAWING E-611.
9. DEMOLITION: DRAWING D-101.
10. P&ID: DRAWING I-611.
11. SUBMIT CONDUIT LAYOUT PER SPEC. 26 05 00.
12. PROVIDE TANK LIGHTNING PROTECTION SYSTEM PER SPEC. 26 41 13.
13. WORK SEQUENCE: SPEC. 01 12 16 AND 26 05 00.

KEY NOTES

1. MINGUS TANK. SEE DWGS M-103 AND C-106.
2. NEW OVERHEAD UTILITY SERVICE METER. PROVIDE SERVICE PEDESTAL ENCLOSURE WITH PANEL-A AND SERVICE RISER PER APS SERVICE GUIDELINES. COORDINATE EXACT LOCATION OF SERVICE PEDESTAL WITH APS DESIGN DOCUMENTS.
3. EXISTING APS TRANSFORMER
4. JUNCTION BOX JB-1. FOR POWER CIRCUITS, MINIMUM 24" X 24" X 24" NEMA 4.
5. RTU24 ENCLOSURE
6. ANTENNA, SURGE SUPPRESSOR, AND RADIO TRANSMISSION LINE. ORIENT ANTENNA TOWARD MINGUS PUMP STATION.
7. LT2460
8. LSHH2460, LSLL2460
9. ZSC2463
10. ZSC2462

Contact Arizona 811 at least two full working days before you begin excavation
ARIZONA811
Call 811 or click Arizona811.com

Brown AND Caldwell
2 N CENTRAL AVE
SUITE 1600
PHOENIX, AZ 85004

FOR CONSTRUCTION

Registered Professional Engineer (Electrical) CERTIFICATE NO. 36697 KENNETH W. CHANDLER Date Signed 03/14/22 ARIZONA, U.S.A.

CITY OF PRESCOTT ARIZONA

ZONE 41 PUMP STATION, TANK AND PIPELINE

REVISIONS

REV	DATE	DESCRIPTION

LINE IS 2 INCHES AT FULL SIZE

DESIGNED:	FRF
DRAWN:	FRF
CHECKED:	HWP
CHECKED:	KWC
APPROVED:	TCM

FILENAME 152624-E-411.DWG
BC PROJECT NUMBER 152624
CLIENT PROJECT NUMBER 17-009

ELECTRICAL

TANK SITE PLAN

DRAWING NUMBER
E-411

SHEET NUMBER
62 OF 84

Path: C:\BCPW\D0474241 FILENAME: 152624-E-411.DWG PLOT DATE: 7/27/2022 11:51 AM CADDSER: CHRISTOPHER RESOP
a5c042a3f27.dlb BlueStakeEngineeringLabel.jpg

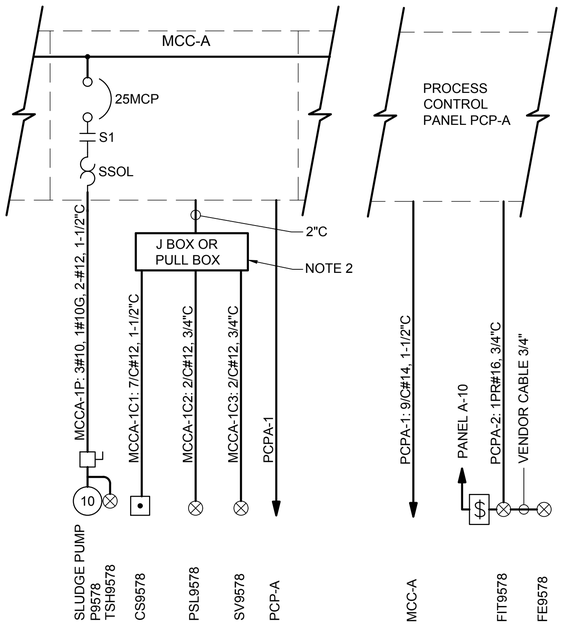

MOTOR CONTROL CENTER - A PROCESS CONTROL PANEL - A

NOTES:

1. MOTOR CONTROL CENTER AND PROCESS CONTROL PANEL HOMERUN CIRCUIT DESIGNATIONS: REFER TO PLAN DRAWINGS.
2. PROVIDE TERMINATION BOX, PULL BOX FITTINGS, OR DUCTBANK TRANSITION, AS REQUIRED.

SINGLE-LINE DIAGRAM
TYPICAL
DETAIL E1001
NO SCALE

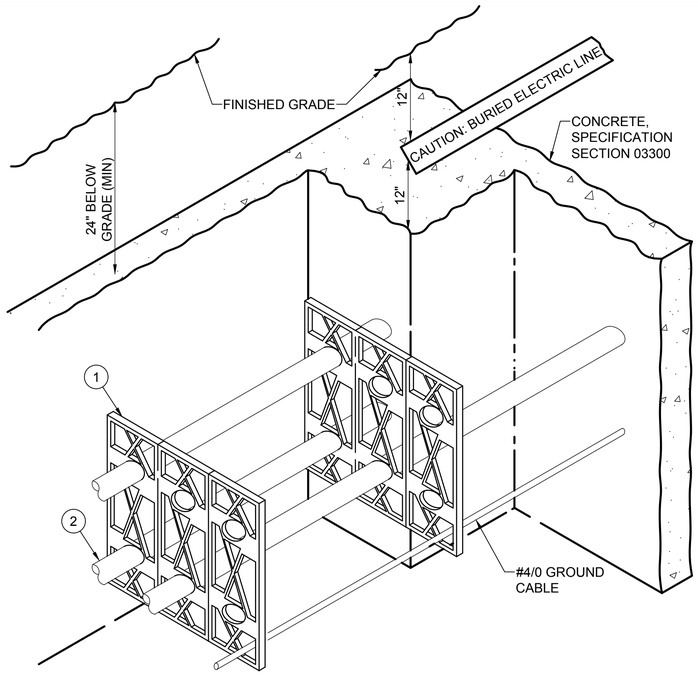

UNDERGROUND DUCTBANKS
REINFORCED LARGE DUCTBANK
DETAIL E2002
NO SCALE

NOTES:

1. REFER TO SPECIFICATION DIVISION 16 FOR DUCTBANK CONSTRUCTION REQUIREMENTS.
2. INSTALL NUMBER AND SIZE OF ELECTRICAL DUCTS AS SHOWN ON DRAWINGS OR SCHEDULES.
3. PROVIDE OSHA APPROVED 6" WIDE RED WARNING TAPE (IDEAL DU-601 OR EQUAL).
4. DIMENSIONS ARE MINIMUM AND TYPICAL FOR OUTSIDE SURFACES.
5. BOND GROUNDING CONDUCTOR TO ALL GROUNDING ELECTRODES INCLUDING BUILDING GROUNDING ELECTRODE AT EACH END OF THE DUCTBANK.
6. SADDLE-TYPE CONDUIT SPACERS (CARLON SNAP-LOC, SNAP-N-STAC, PW EAGLE PIPE, UNDERGROUND DEVICES, OR EQUAL).
7. PROVIDE PLYWOOD FOR DUCTBANK CONCRETE FORMS.

KEY NOTES:

1. INSTALL PVC CONDUIT SPACERS ON 5'-0" CENTERS LOCATED 12" FROM STIRRUPS.
2. PROVIDE 2" SEPARATION FOR CONDUITS LESS THAN 4". PROVIDE 3" SEPARATION FOR CONDUITS 4" AND LARGER.

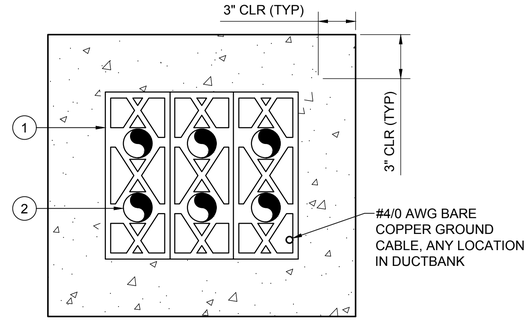

SECTION
SEE KEY NOTES

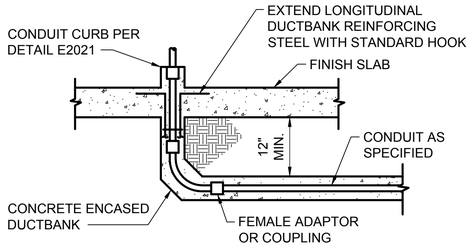

DUCTBANK RISER LESS THAN 18" IN WIDTH OR DEPTH

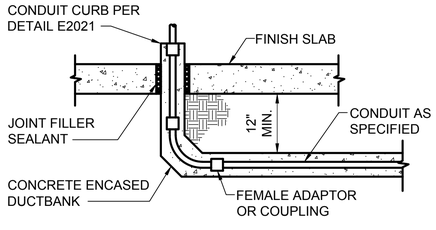

GREATER THAN 18" IN WIDTH OR DEPTH

UNDERGROUND DUCTBANKS
RISER FROM DUCTBANK
DETAIL E2022
NO SCALE

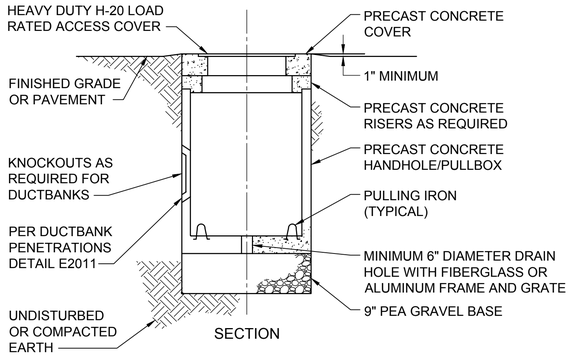

SECTION

NOTES:

1. HANDHOLE/PULLBOX DEPTH, SIZE AND LOCATION PER DRAWINGS.
2. MINIMUM INTERIOR DIMENSIONS SHALL BE 3' x 3' x 3'D UON.
3. BOND DUCTBANK GROUND CONDUCTORS TOGETHER.
4. MANHOLE INTERIOR SPACE: CLASSIFIED AS CORROSIVE AREA PER SPECIFICATION DIVISION 16.

RACEWAY BOXES
HANDHOLE/PULLBOX
DETAIL E2701
NO SCALE

Brown AND Caldwell
2 N CENTRAL AVE
SUITE 1600
PHOENIX, AZ 85004

FOR CONSTRUCTION



CITY OF PRESCOTT
ARIZONA

ZONE 41 MINGUS PUMP STATION, TANK AND PIPELINE

REVISIONS

REV	DATE	DESCRIPTION

LINE IS 2 INCHES AT FULL SIZE

DESIGNED:	FRF
DRAWN:	CJR
CHECKED:	KWC
CHECKED:	HWP
APPROVED:	TCM

FILENAME
152624-E-501.DWG
BC PROJECT NUMBER
152624
CLIENT PROJECT NUMBER
17-009

ELECTRICAL

STANDARD DETAILS
1

DRAWING NUMBER
E-501
SHEET NUMBER
63 OF 84

Path: C:\BCPW\D0474241 FILENAME: 152624-E-501.DWG PLOT DATE: 7/27/2022 11:52 AM CAD USER: CHRISTOPHER RESOP
COP1.png

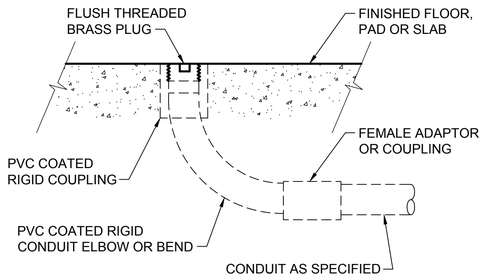

UNDERGROUND RACEWAYS
FLUSH TERMINATION IN SLAB

DETAIL E2111

NO SCALE

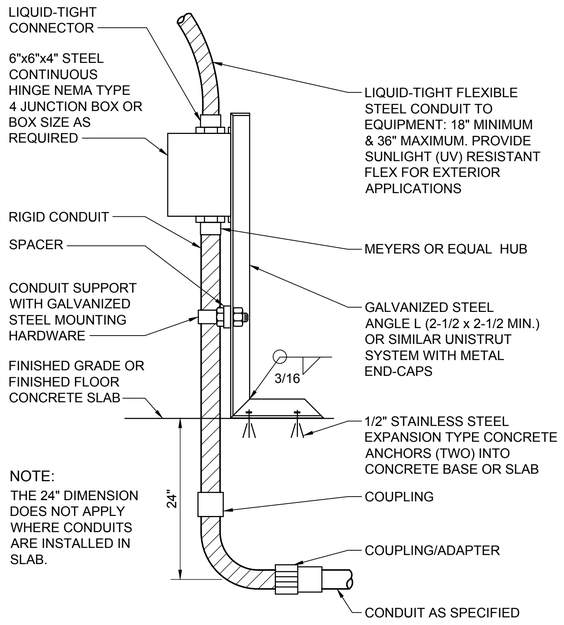

NOTE:
THE 24" DIMENSION DOES NOT APPLY WHERE CONDUITS ARE INSTALLED IN SLAB.

UNDERGROUND RACEWAYS
STUB-UP AND J-BOX

DETAIL E2112

NO SCALE

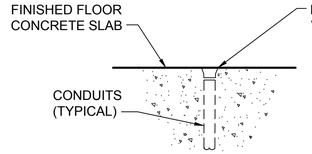

UNDERGROUND RACEWAYS
UNDER FREESTANDING EQUIPMENT

DETAIL E2113

NO SCALE

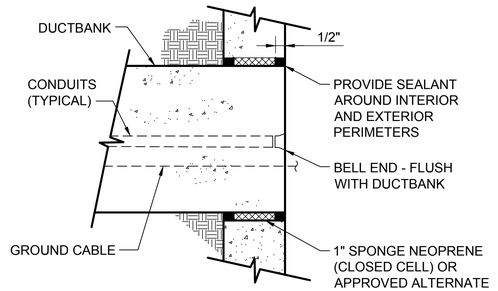

UNDERGROUND DUCTBANKS
DUCTBANK AT STRUCTURE

DETAIL E2011

NO SCALE

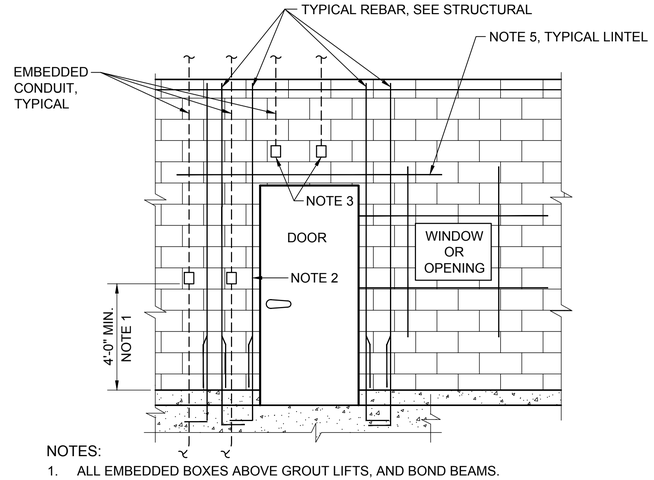

NOTES:

1. ALL EMBEDDED BOXES ABOVE GROUT LIFTS, AND BOND BEAMS.
2. EMBEDDED BOXES ARE NOT ALLOWED IN WALL BLOCK CELLS WITH VERTICAL REBAR.
3. EMBEDDED BOXES FOR EXIT LIGHTS, FIRE ALARMS, INTRUSION SWITCHES, ETC. ABOVE HORIZONTAL LINTEL. SEE STRUCTURAL FOR LINTEL HEIGHTS.
4. CUT OPENINGS IN CMU FOR EMBEDDED BOXES.
5. HORIZONTAL CONDUIT RUNS ARE NOT ALLOWED IN BOND BEAM OR LINTEL.
6. ELECTRICAL EQUIPMENT WEIGHING OVER 200 POUNDS MAY NOT BE ATTACHED TO WALLS. PROVIDE EQUIPMENT RACK PER DETAIL E4001.

EMBEDDED RACEWAYS
CMU WALLS

DETAIL E2211

NO SCALE

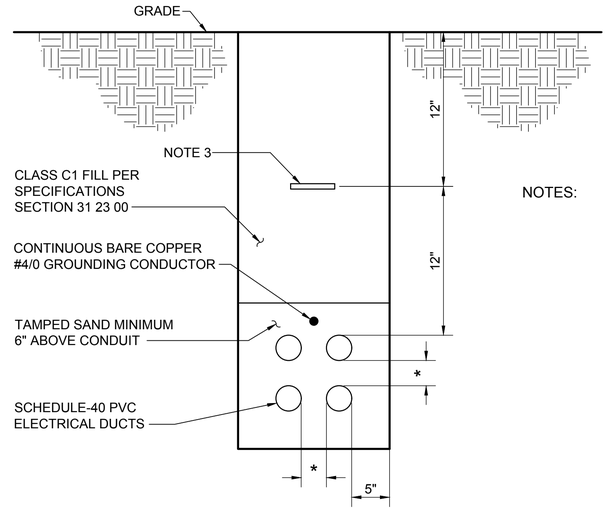

NOTES:

1. REFER TO SPECIFICATION DIVISION 16 FOR DIRECT BURIED RACEWAY CONSTRUCTION REQUIREMENTS.
2. NUMBER AND SIZE OF ELECTRICAL DIRECT BURIED RACEWAYS AS INDICATED ON DRAWINGS OR SCHEDULES.
3. OSHA APPROVED 6" WIDE RED WARNING TAPE (IDEAL DU-601 OR EQUAL).
4. DIMENSIONS ARE MINIMUM.
5. BOND GROUNDING CONDUCTOR TO BUILDING GROUNDING ELECTRODES, POWER SOURCE AND LOAD ENCLOSURES.
6. SADDLE-TYPE CONDUIT SPACERS REQUIRED EVERY 8' (CARLON SNAP-LOC, SNAP-N-STAC, OR EQUAL).
   *PROVIDE 2" SEPARATION FOR CONDUITS LESS THAN 4".
   *PROVIDE 3" SEPARATION FOR CONDUITS 4" AND LARGER.

UNDERGROUND RACEWAYS
DIRECT BURIED

DETAIL E2101

NO SCALE

Brown AND Caldwell
2 N CENTRAL AVE
SUITE 1600
PHOENIX, AZ 85004

FOR CONSTRUCTION



CITY OF PRESCOTT
ARIZONA

ZONE 41 MINGUS PUMP STATION, TANK AND PIPELINE

REVISIONS		
REV	DATE	DESCRIPTION

LINE IS 2 INCHES AT FULL SIZE

DESIGNED:	FRF
DRAWN:	CJR
CHECKED:	KWC
CHECKED:	HWP
APPROVED:	TCM

FILENAME
152624-E-502.DWG

BC PROJECT NUMBER
152624

CLIENT PROJECT NUMBER
17-009

ELECTRICAL

STANDARD DETAILS 2

DRAWING NUMBER

E-502

SHEET NUMBER
64 OF 84

Path: C:\BCPW\D0474241 FILENAME: 152624-E-502.DWG PLOT DATE: 7/27/2022 11:52 AM CAD USER: CHRISTOPHER RESOP
COPY.png

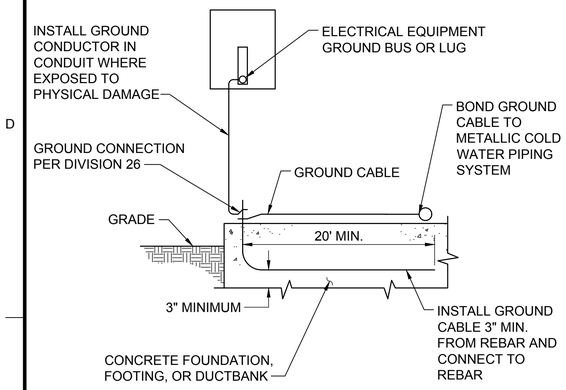

GROUND ELECTRODE
CONCRETE ENCASED
DETAIL E3001
NO SCALE

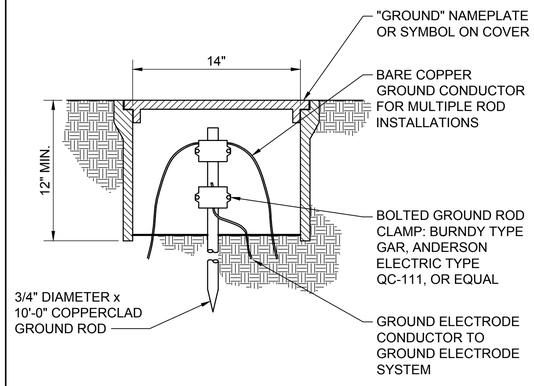

NOTES:

1. TEST WELL OF CONCRETE, PVC, OR FRP MATERIAL.
2. H-20 LOAD RATED COVER FOR TEST WELL IN TRAFFIC AREA.

GROUND ELECTRODE
TEST WELL
DETAIL E3002
NO SCALE

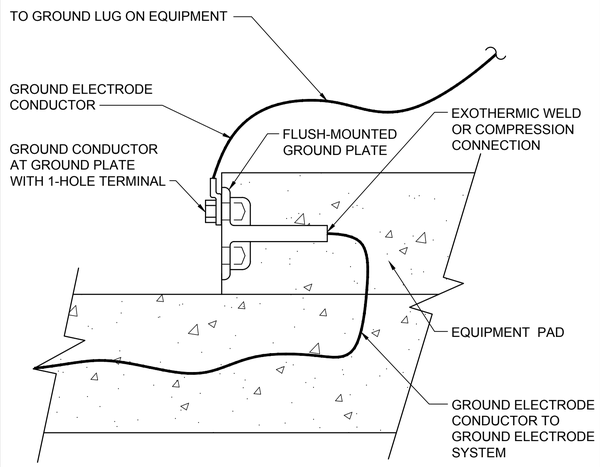

NOTE:

1. REQUIRED AT ELECTRICAL EQUIPMENT

EQUIPMENT GROUNDING
GROUND PLATE IN SLAB
DETAIL E3101
NO SCALE

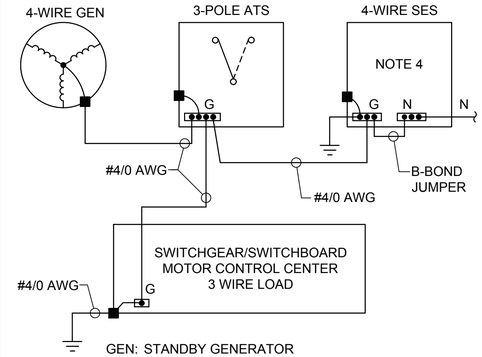

GEN: STANDBY GENERATOR
ATS: AUTOMATIC TRANSFER SWITCH
SES: SERVICE ENTRANCE SECTION
G: GROUND (GROUNDING CONDUCTOR)
B: BOND NEUTRAL TO GROUND AT SES AND GENERATOR
N: NEUTRAL

NOTES:

1. REFERENCE NEC EXHIBIT 250.11 HANDBOOK FIGURES
2. BOND NEUTRAL TO GROUND, DO NOT INSTALL NEUTRAL FROM SES TO ATS.
3. BOND NEUTRAL TO GROUND, DO NOT INSTALL NEUTRAL FROM GENERATOR TO ATS.
4. LABEL PER NEC 702.8 A - SIGNS

STANDBY GENERATOR GROUNDING
3-PHASE 4-WIRE, NEUTRAL NOT USED
DETAIL E3201
NO SCALE

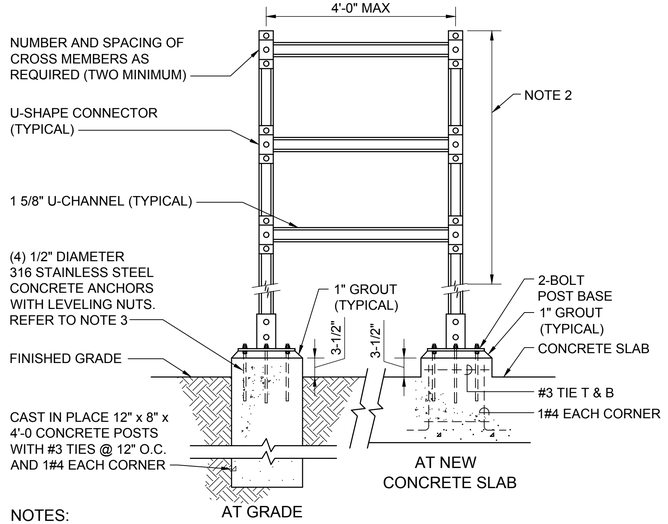

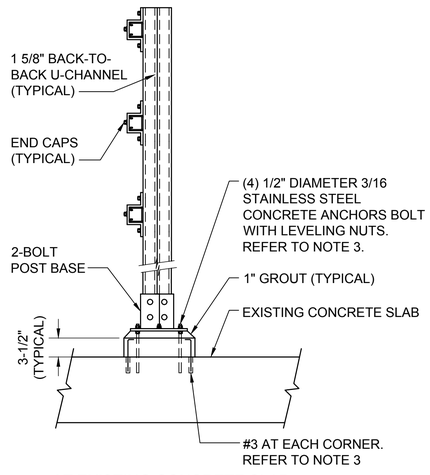

AT EXISTING CONCRETE SLAB

NOTES:

1. EQUIPMENT RACK SIZING:
   A. ONE ITEM GREATER THAN 150 SQUARE INCHES.
   B. TWO EQUIPMENT ITEMS GREATER THAN 130 SQUARE INCHES.
   C. THREE OR MORE EQUIPMENT ITEMS.
   D. PROVIDE 316 STAINLESS STEEL CHANNEL END-CAPS, AND FITTINGS
   E. PROVIDE 1/4" MINIMUM ALUMINUM PLATE FOR SMALL ITEMS
2. MOUNT INDICATORS OR EQUIPMENT OPERATING HANDLES FOUR FEET ABOVE FLOOR OR PLATFORM.
3. REFER TO STRUCTURAL DRAWINGS AND SPECIFICATION FOR ANCHORAGE MATERIAL AND METHOD REQUIREMENTS.
4. MATERIAL AND HARDWARE PER SPECIFICATION DIVISION 26.

EQUIPMENT SUPPORTS
STRUT RACK
DETAIL E4001
NO SCALE

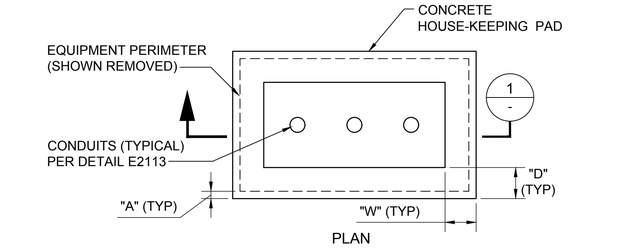

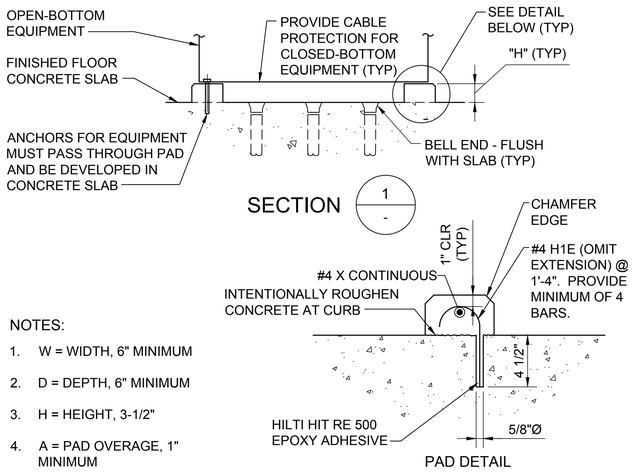

NOTES:

1. W = WIDTH, 6" MINIMUM
2. D = DEPTH, 6" MINIMUM
3. H = HEIGHT, 3-1/2"
4. A = PAD OVERAGE, 1" MINIMUM

EQUIPMENT SUPPORTS
HOUSE-KEEPING PAD
DETAIL E4021
NO SCALE

Brown AND Caldwell
2 N CENTRAL AVE
SUITE 1600
PHOENIX, AZ 85004

FOR CONSTRUCTION



CITY OF PRESCOTT
ARIZONA

ZONE 41 MINGUS PUMP STATION, TANK AND PIPELINE

REVISIONS

REV	DATE	DESCRIPTION

LINE IS 2 INCHES AT FULL SIZE

DESIGNED:	FRF
DRAWN:	CJR
CHECKED:	KWC
CHECKED:	HWP
APPROVED:	TCM

FILENAME
152624-E-503.DWG

BC PROJECT NUMBER
152624

CLIENT PROJECT NUMBER
17-009

ELECTRICAL

STANDARD DETAILS
3

DRAWING NUMBER
E-503

SHEET NUMBER
65 OF 84

Path: C:\BCPW\D0474241 FILENAME: 152624-E-503.DWG PLOT DATE: 7/27/2022 11:52 AM CAD USER: CHRISTOPHER RESOP
COPY.png

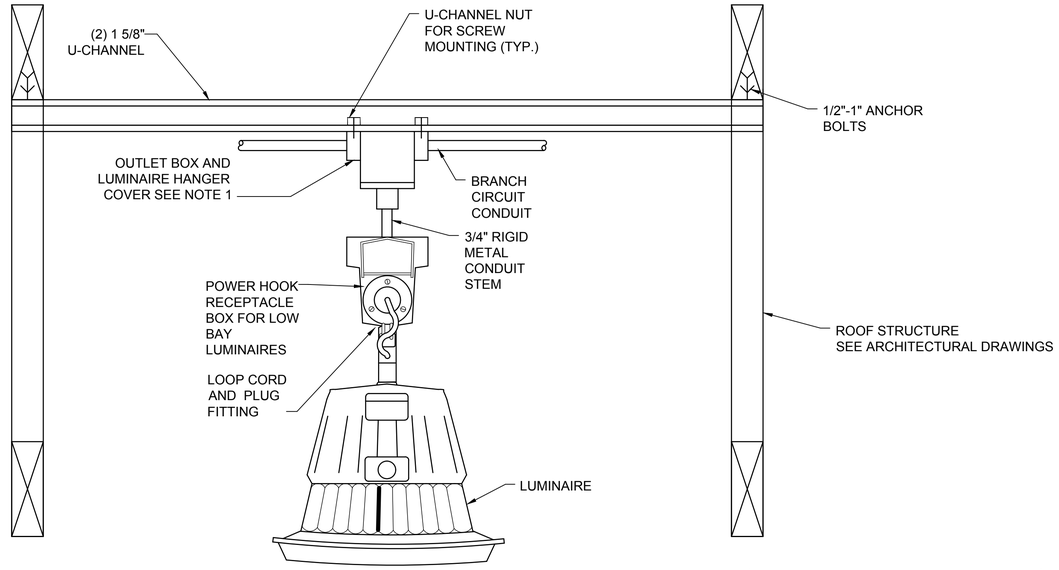

NOTE:
1. OUTLET BOX AND LUMINAIRE COVER ARE ONLY REQUIRED WHERE THE FIXTURE IS REQUIRED TO BE MOUNTED AT A SPECIFIED HEIGHT.

TYPICAL ROOF TEE PENDANT MOUNT
LUMINAIRE INSTALLATION
DETAIL E9002
NO SCALE

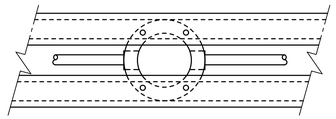

PLAN

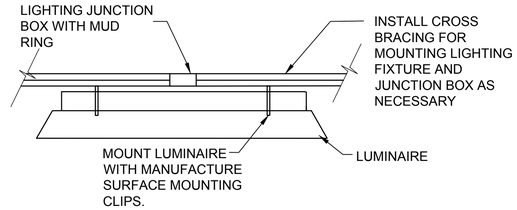

NOTES:
1. LIGHTING MANUFACTURE CLIPS SHALL BE MOUNTED TO SUPPORTING CROSS BRACING. MOUNTING DIRECTLY WITH ONLY DRYWALL SUPPORT NOT ACCEPTABLE.

PUMP ROOM
LUMINAIRE MOUNTING
DETAIL PD1001
NO SCALE

Brown AND Caldwell
2 N CENTRAL AVE
SUITE 1600
PHOENIX, AZ 85004

FOR CONSTRUCTION



CITY OF PRESCOTT
ARIZONA

ZONE 41 MINGUS PUMP STATION, TANK AND PIPELINE

REVISIONS

REV	DATE	DESCRIPTION

LINE IS 2 INCHES
AT FULL SIZE

DESIGNED:	FRF
DRAWN:	CJR
CHECKED:	KWC
CHECKED:	HWP
APPROVED:	TCM

FILENAME
152624-E-504.DWG
BC PROJECT NUMBER
152624
CLIENT PROJECT NUMBER
17-009

ELECTRICAL

STANDARD DETAILS 4

DRAWING NUMBER
E-504

SHEET NUMBER
66 OF 84

Path: C:\BCPW\D0474241 FILENAME: 152624-E-504.DWG PLOT DATE: 7/27/2022 11:52 AM CAD USER: CHRISTOPHER RESOP
COP1.png

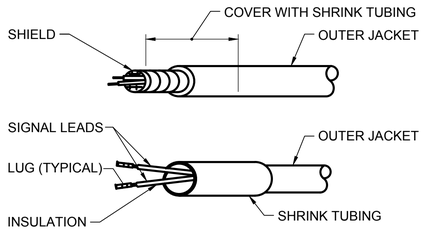

INSTRUMENT TERMINATION

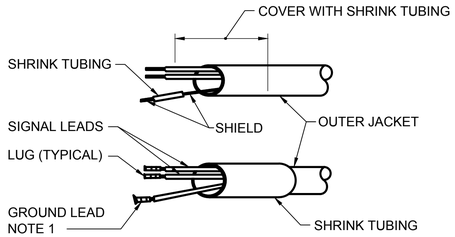

PANEL TERMINATION

NOTE:
1. GROUND SHIELD AT PANEL NOT AT INSTRUMENT.

SHIELDED CABLE TERMINATION

DETAIL I0501

NO SCALE

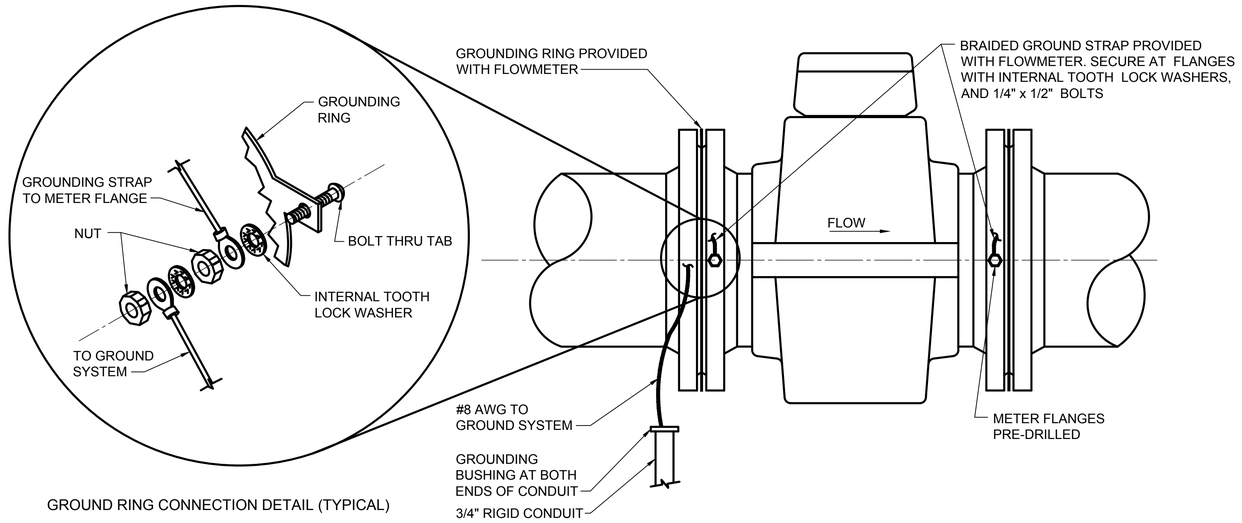

GROUND RING CONNECTION DETAIL (TYPICAL)

FLOW TRANSMITTER
MAGNETIC - GROUNDING

DETAIL I4001

NO SCALE

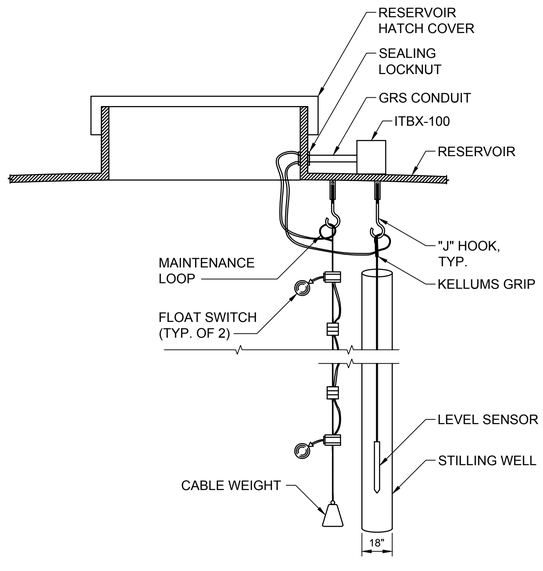

INSTRUMENT MOUNTING DETAIL

DETAIL I1 / E-411

NO SCALE

Brown AND Caldwell
2 N CENTRAL AVE
SUITE 1600
PHOENIX, AZ 85004

FOR CONSTRUCTION



CITY OF PRESCOTT
ARIZONA

ZONE 41 MINGUS PUMP STATION, TANK AND PIPELINE

REVISIONS

REV	DATE	DESCRIPTION

LINE IS 2 INCHES
AT FULL SIZE

DESIGNED:	FRF
DRAWN:	FRF
CHECKED:	KWC
CHECKED:	HWP
APPROVED:	TCM

FILENAME
152624-E-505.DWG
BC PROJECT NUMBER
152624
CLIENT PROJECT NUMBER
17-009

ELECTRICAL

STANDARD DETAILS 5

DRAWING NUMBER
E-505

SHEET NUMBER
67 OF 84

Path: C:\BCPW\D0474241 FILENAME: 152624-E-505.DWG PLOT DATE: 7/27/2022 11:52 AM CAD USER: CHRISTOPHER RESOP
COP1.png

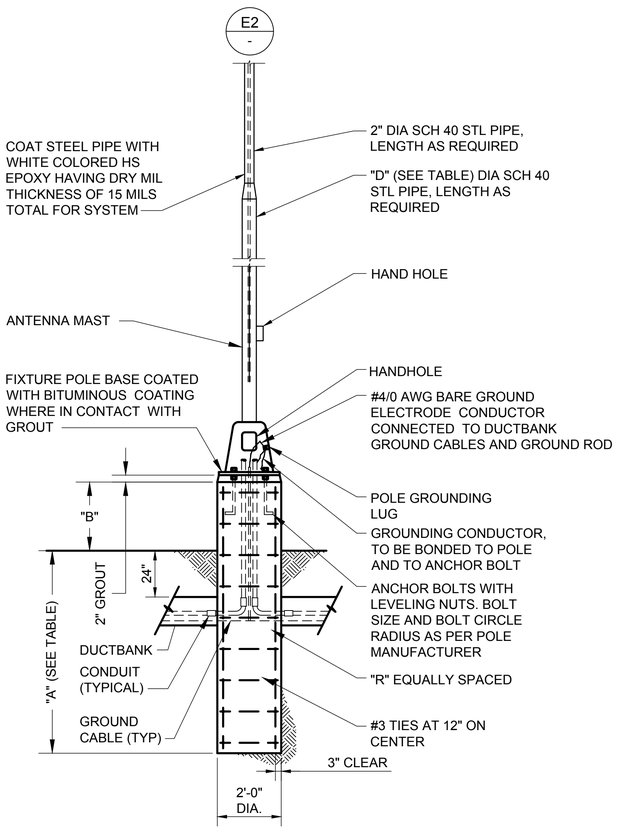

POLE HEIGHT	"A" MINIMUM	MAX BASE HEIGHT "B"	"R" LONGITUDINAL REINF.	LOWER PIPE "D"
10'-0"	3'-0"	3'-0"	(4) #4	3"
20'-0"	3'-6"	3'-0"	(4) #4	3"
30'-0"	4'-6"	3'-0"	(4) #5	4"
40'-0"	5'-6"	3'-0"	(4) #6	5"
50'-0"	9'-0"	2'-0"	(8) #8	12"

NOTES:

1. FOUNDATION SHALL BE DRILLED IN ORIGINAL SOIL OR 90% COMPACTED BACKFILL OF APPROVED TYPE.
2. COMMUNICATIONS POLE AND ANTENNA SHALL BE USED FOR CITY OF PRESCOTT DATA TRANSMISSION ONLY.
3. FOR 50' POLE HEIGHT, SCH 80 PIPE IS REQUIRED.
4. POLE HEIGHT PER SPEC. 40 66 56 RADIO PATH SURVEY. INITIAL HEIGHT: 30 FEET.

ANTENNA MAST

DETAIL E1 / E-401

SCALE: NONE

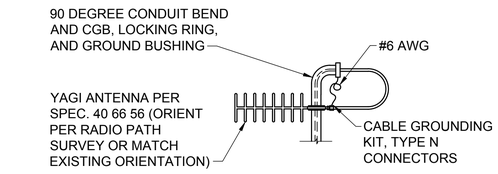

DIRECTIONAL ANTENNA

DETAIL E2 / E-401, 411

SCALE: NONE

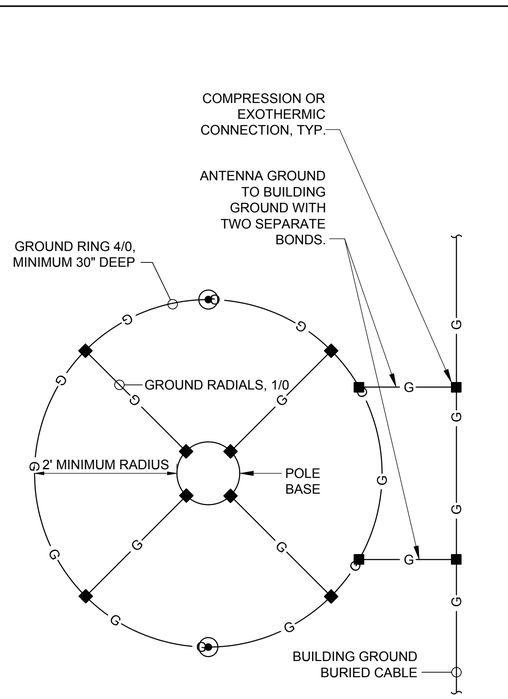

ANTENNA MAST GROUNDING

DETAIL E3 / E-401

SCALE: NONE

NOTES:

GROUNDING PER ANSI TI.334-2002 SECTION 5

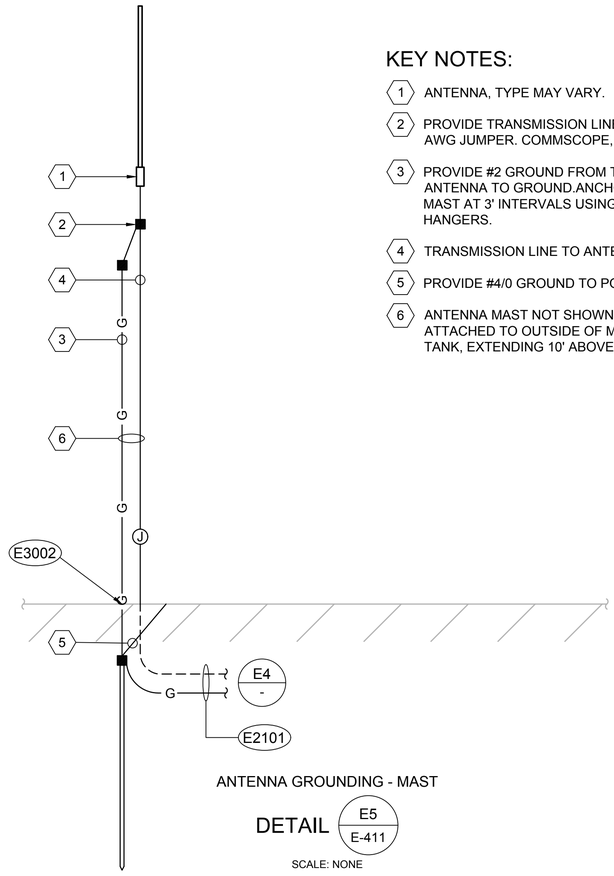

ANTENNA GROUNDING - MAST

DETAIL E5 / E-411

SCALE: NONE

KEY NOTES:

1. ANTENNA, TYPE MAY VARY.
2. PROVIDE TRANSMISSION LINE GROUND KIT WITH #6 AWG JUMPER. COMMSCOPE, OR EQUAL.
3. PROVIDE #2 GROUND FROM TRANSMISSION LINE AT ANTENNA TO GROUND.ANCHOR GROUND CABLE TO MAST AT 3' INTERVALS USING STAINLESS STEEL CABLE HANGERS.
4. TRANSMISSION LINE TO ANTENNA.
5. PROVIDE #4/0 GROUND TO POLE BASE.
6. ANTENNA MAST NOT SHOWN, 1-1/2" SCHEDULE 40 ATTACHED TO OUTSIDE OF MANWAY SUPPORT AND/OR TANK, EXTENDING 10' ABOVE TANK.

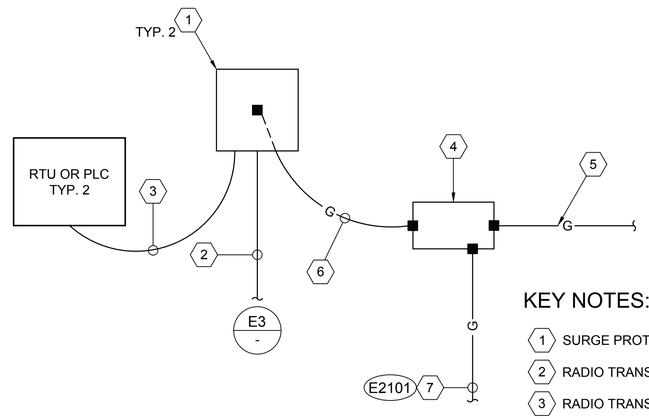

DETAIL E4 / E-401, 411

SCALE: NONE

KEY NOTES:

1. SURGE PROTECTOR IN ENCLOSURE
2. RADIO TRANSMISSION LINE TO ANTENNA
3. RADIO TRANSMISSION LINE JUMPER, MAXIMUM 24'
4. PROVIDE EXTERNAL GROUND BUS BAR (EGB), FIELD LOCATE
5. PROVIDE #2 GROUND FROM SWITCHBOARD GROUND BUS OR BUILDING GROUND GRID
6. PROVIDE #2 AWG GROUND TO SURGE PROTECTOR, 20' MAX.
7. EXTEND UNDERGROUND TO ANTENNA GROUND VIA DUCTBANK

Brown AND Caldwell
2 N CENTRAL AVE
SUITE 1600
PHOENIX, AZ 85004

FOR CONSTRUCTION



CITY OF PRESCOTT ARIZONA

ZONE 41 MINGUS PUMP STATION, TANK AND PIPELINE

REVISIONS

REV	DATE	DESCRIPTION

LINE IS 2 INCHES AT FULL SIZE

DESIGNED: FRF
DRAWN: CJR
CHECKED: KWC
CHECKED: HWP
APPROVED: TCM

FILENAME 152624-E-506.DWG
BC PROJECT NUMBER 152624
CLIENT PROJECT NUMBER 17-009

ELECTRICAL

STANDARD DETAILS 6

DRAWING NUMBER
E-506

SHEET NUMBER
68 OF 84

Path: C:\BCPW\D0474241 FILENAME: 152624-E-506.DWG PLOT DATE: 7/27/2022 11:52 AM CAD USER: CHRISTOPHER RESOP COP1.png

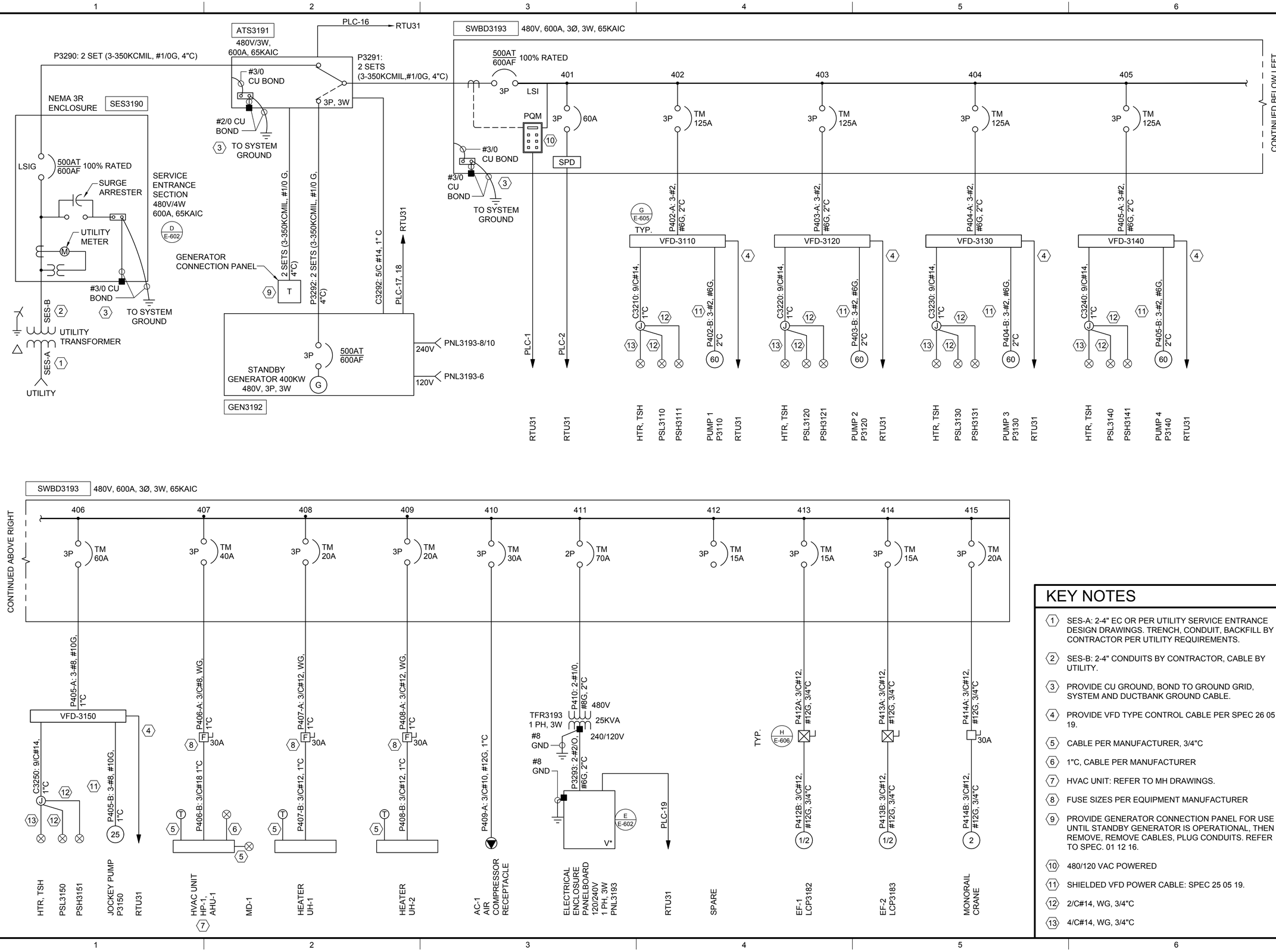

KEY NOTES

1. SES-A: 2-4" EC OR PER UTILITY SERVICE ENTRANCE DESIGN DRAWINGS. TRENCH, CONDUIT, BACKFILL BY CONTRACTOR PER UTILITY REQUIREMENTS.
2. SES-B: 2-4" CONDUITS BY CONTRACTOR, CABLE BY UTILITY.
3. PROVIDE CU GROUND, BOND TO GROUND GRID, SYSTEM AND DUCTBANK GROUND CABLE.
4. PROVIDE VFD TYPE CONTROL CABLE PER SPEC 26 05 19.
5. CABLE PER MANUFACTURER, 3/4"C
6. 1"C, CABLE PER MANUFACTURER
7. HVAC UNIT: REFER TO MH DRAWINGS.
8. FUSE SIZES PER EQUIPMENT MANUFACTURER
9. PROVIDE GENERATOR CONNECTION PANEL FOR USE UNTIL STANDBY GENERATOR IS OPERATIONAL, THEN REMOVE, REMOVE CABLES, PLUG CONDUITS. REFER TO SPEC. 01 12 16.
10. 480/120 VAC POWERED
11. SHIELDED VFD POWER CABLE: SPEC 25 05 19.
12. 2/C#14, WG, 3/4"C
13. 4/C#14, WG, 3/4"C

Brown AND Caldwell
2 N CENTRAL AVE
SUITE 1600
PHOENIX, AZ 85004

FOR CONSTRUCTION



CITY OF PRESCOTT ARIZONA

ZONE 41 MINGUS PUMP STATION, TANK AND PIPELINE

REVISIONS

REV	DATE	DESCRIPTION

LINE IS 2 INCHES AT FULL SIZE

DESIGNED:	FRF
DRAWN:	CJR
CHECKED:	KWC
CHECKED:	HWP
APPROVED:	TCM

FILENAME 152624-E-601.DWG
BC PROJECT NUMBER 152624
CLIENT PROJECT NUMBER 17-009

ELECTRICAL

PUMP STATION SINGLE LINE DIAGRAM

DRAWING NUMBER
E-601
SHEET NUMBER
69 OF 84

Path: C:\BCPW\D0474241 FILENAME: 152624-E-601.DWG PLOT DATE: 7/27/2022 11:53 AM CAD USER: CHRISTOPHER RESOP
COPI.png

MINGUS (ZONE 41) BOOSTER PUMP STATION

SWBD3193 LOAD SUMMARY AT 480 VAC

LOAD DESCRIPTION	KVA	HP	CONNECTED FLA	RUNNING FLA
PUMP 1 P3110		60	77	77
PUMP 2 P3120		60	77	77
PUMP 3 P3130		60	77	77
PUMP 4 P3140 (STANDBY)		60	77	
JOCKEY PUMP P3150		20	27	27
HVAC UNIT AHU-1, HP-1			30.1	30.1
PUMP STATION HEATER 1 UH-1			6	6
PUMP STATION HEATER 2 UH-2			6	6
AIR COMPRESSOR AC-1		10	14	14
PANEL PNL4193 480-120/240V	25		52.1	52.1
PUMP STATION EXHAUST FAN 1 EF-1, LCP3182		0.5	1.1	1.1
PUMP STATION EXHAUST FAN 2 EF-2, LCP3183		0.5	1.1	1.1
MONORAIL CRANE		2	3.4	3.4
SUBTOTAL:	25.0	273.0	448.8	371.8
PLUS 25% OF LARGEST MOTOR:			19.3	19.3
AMPERE TOTAL:			**468.1**	**391.1**
400 kW STANDBY GENERATOR AT 0.95 PF:	421.1			506
SIZING USING RUNNING LOAD DEMAND FACTOR PER NEC 220.50/430.26				

DETAIL D / E-601

SCALE: NONE

LUMINAIRE SCHEDULE

TYPE	DESCRIPTION	MODEL #
A1 / 1/61	HOLOPHANE BANTAM 2000 LED - PENDANT, HOOK OR LOOP MOUNTING, CITY FURNISHED, ALUMINUM HOUSING, LED SYSTEM, WET LOCATION LISTED, IP65 RATED, 120VAC	HOLOPHANE BALED 8L 5K 12 P G CDP-L5-15-X PHCB UPH-35-120-WH
A2 / 1/37	INDUSTRIAL LIGHTING PRODUCTS INC. WTX LED - SURFACE MOUNT, WHITE FORMED PLASTIC HOUSING, FIBERGLASS BODY, AMAZON 4', MULTIVOLT, 4000K CCT, WET LOCATION LISTED, SMOOTH ACRYLIC CLEAR LENS. PROVIDE WITH STAINLESS STEEL MOUNTING BRACKET OPTION.	INDUSTRIAL LIGHTING PRODUCTS INC. WTX-36W-U-40-SACL
A3 / 1/104	LITHONIA CSXW LED - SURFACE MOUNT, RUGGED DIE-CAST ALUMINUM HOUSING, ACRYLIC LENS, HIGH-EFFECIENCY LED'S, ZERO UPLIGHT, NIGHTTIME FRIENDLY, IP65 RATED, CONSISTENT WITH LEED AND GREEGLOBE CRITERIA FOR ELIMINATING WASTEFUL UPLIGHT	LITHONIA CSXW LED 30C 1000 50K T4M 120 DDBXD
EM1 / 1/3	LITHONIA ELM2 LED - SURFACE MOUNT, THERMOPLASTIC HOUSING, POLYCARBONATE LENS, LED SYSTEM, 90 MINUTE EMERGENCY LAMP CAPACITY, NICKEL CADMIUM BATTERY, MEETS UL 924, NFPA 101, NEC AND OSHA ILLUMINATION STANDARDS	LITHONIA ELM2 LED HO
EM2 / 1/1	LITHONIA LQM - SURFACE MOUNT, THERMOPLASTIC HOUSING, LED SYSTEM, 90 MINUTE EMERGENCY LAMP CAPACITY, NICKEL CADMIUM BATTERY, MEETS UL 924, NFPA 101, NEC AND OSHA ILLUMINATION STANDARDS	LITHONIA LQM S W 3 R 120/277 EL N

DETAIL F / E-402

SCALE: NONE

SINGLE PHASE PANEL: PNL3193

VOLTAGE, PHASE, & WIRE:	120 / 240	VAC, 1 PHASE, 3 WIRE	LOCATION:		ELECTRICAL ROOM
BUS SIZE:	100	AMPERE	ENCLOSURE:		NEMA-12
MAIN SIZE:	60	AMPERE	MOUNTING:		WALL
MAIN TYPE:	YES	CIRCUIT BREAKER	BUS BRACING:		14 K AIC
BREAKER TYPE:	NO	BOLT-ON	FED FROM:		SWITCHBOARD

CIRCUIT TITLE / LOAD DESCRIPTION	AWG WIRE SIZE	RACE-WAY SIZE	BREAKER CKT NO.	BREAKER AMP	BREAKER POLE	LOAD (VA) PHASE A	LOAD (VA) PHASE B	LOAD (VA) PHASE B	LOAD (VA) PHASE A	BREAKER POLE	BREAKER AMP	BREAKER CKT NO.	AWG WIRE SIZE	RACE-WAY SIZE	CIRCUIT TITLE / LOAD DESCRIPTION
EXTERIOR LIGHTING	2#12, #12G	3/4"	1	20	1	1040				1	20	2			SPARE
PUMP ROOM LIGHTING	2#12, #12G	3/4"	3	20	1		278			1	20	4			SPARE
PUMP ROOM LIGHTING	2#12, #12G	3/4"	5	20	1	278			960	1	20	6	2#12, #12G	3/4"	GENERATOR BATTERY CHARGER
ELECTRICAL ROOM LIGHTING	2#12, #12G	3/4"	7	20	1		229	1250		2	30	8	2#10, #12G	3/4"	GENERATOR JACKET WATER HEATER
ELECTRICAL ROOM LIGHTING	2#12, #12G	3/4"	9	20	1	229			1250			10			
PUMP AND ELECTRICAL ROOM EXIT LIGHTING	2#12, #12G	3/4"	11	20	1		4	20		1	20	12	2#12, #12G	3/4"	FLOW METER FIT3160
PUMP ROOM RECEPTACLES	2#12, #12G	3/4"	13	20	1	360			20	1	20	14	2#12, #12G	3/4"	FLOW METER FIT3150
PUMP ROOM RECEPTACLES	2#12, #12G	3/4"	15	20	1		360	180		1	20	16	2#12, #12G	3/4"	RTU31 PLC
ELECTRICAL ROOM RECEPTACLES	2#12, #12G	3/4"	17	20	1	360			180	1	20	18	2#12, #12G	3/4"	RTU31 PLC UTILITY
IRRIGATION	2#12, #12G	3/4"	19	20	1		30			1	20	20			SPARE
ELECTRICAL ROOM HVAC AHU-1 RECEPTACLE	2#12, #12G	3/4"	21	20	1	180				1	20	22	MFR.		SURGE PROTECTOR
SPARE			23	20	1					2	30	24			
	COLUMN	TOTALS:				2447	901	1450	2410						

PHASE-A LOAD (VA): 4857
PHASE-B LOAD (VA): 2351

TOTAL LOAD (V. 7208 I (amp) 30.0

NOTE: SELECT FORMULA VOLTAGE
I (amp) = VA / (240 VAC)

DETAIL E / E-601

SCALE: NONE

Brown AND Caldwell
2 N CENTRAL AVE
SUITE 1600
PHOENIX, AZ 85004

FOR CONSTRUCTION

Registered Professional Engineer — CERTIFICATE NO. 36697 — KENNETH W. CHANDLER — Date Signed 6/12/24 — ARIZONA, U.S.A.

CITY OF PRESCOTT ARIZONA

ZONE 41 MINGUS PUMP STATION, TANK AND PIPELINE

REVISIONS

REV	DATE	DESCRIPTION

LINE IS 2 INCHES AT FULL SIZE

DESIGNED: FRF
DRAWN: CJR
CHECKED: KWC
CHECKED: HWP
APPROVED: TCM

FILENAME
152624-E-602.DWG

BC PROJECT NUMBER
152624

CLIENT PROJECT NUMBER
17-009

ELECTRICAL

PUMP STATION LOAD SUMMARY AND SCHEDULES

DRAWING NUMBER
E-602

SHEET NUMBER
70 OF 84

Path: C:\BCPWD\04742\1 FILENAME: 152624-E-602.DWG PLOT DATE: 5/21/2024 10:21 AM CAD USER: CHRISTOPHER.RESOP
COP1.png

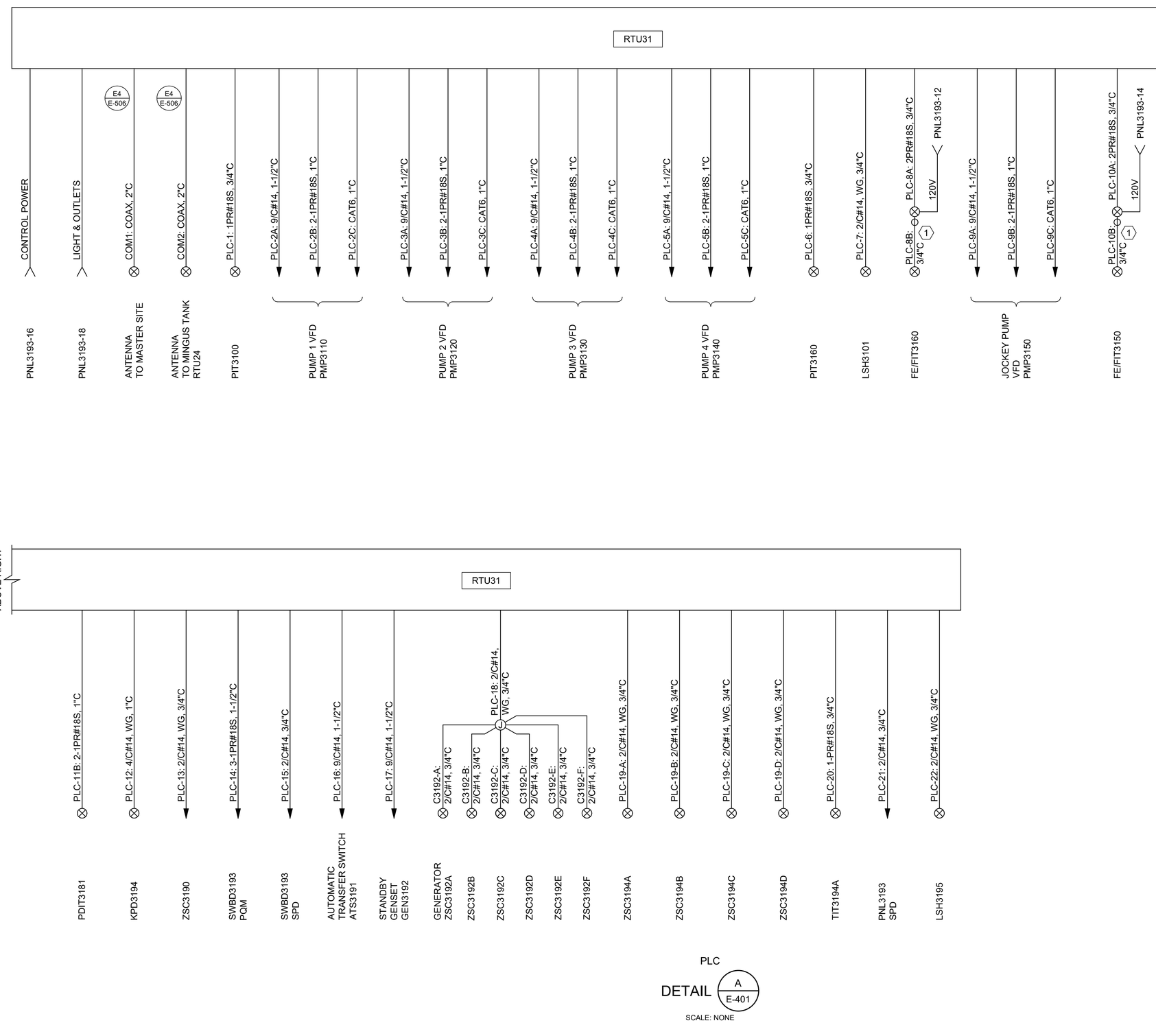

GENERAL NOTES

1. CIRCUIT IDENTIFICATIONS AND ABBREVIATIONS DRAWING E-001.
2. CONTROL CABLES: MULTI-CONDUCTOR PER SPECIFICATION 26 05 19.
3. SHIELDED CABLE TERMINATIONS PER I0501.
4. PROVIDE AND COORDINATE RTU AND RADIOS PER CITY OF PRESCOTT SCADA PROJECT GUIDELINES.

KEY NOTES

1. MANUFACTURER CABLE, 3/4"C

Brown AND Caldwell
2 N CENTRAL AVE
SUITE 1600
PHOENIX, AZ 85004

FOR CONSTRUCTION

Registered Professional Engineer (Electrical) CERTIFICATE NO. 36697 KENNETH W. CHANDLER Date Signed 05/21/24 ARIZONA, U.S.A.

CITY OF PRESCOTT ARIZONA

ZONE 41 MINGUS PUMP STATION, TANK AND PIPELINE

REVISIONS

REV	DATE	DESCRIPTION

LINE IS 2 INCHES AT FULL SIZE

DESIGNED: FRF
DRAWN: CJR
CHECKED: KWC
CHECKED: HWP
APPROVED: TCM

FILENAME 152624-E-603.DWG
BC PROJECT NUMBER 152624
CLIENT PROJECT NUMBER 17-009

ELECTRICAL

PUMP STATION CONTROL SINGLE LINE DIAGRAM

DRAWING NUMBER
E-603

SHEET NUMBER
71 OF 84

Path: C:\BCPW\D0474241 FILENAME: 152624-E-603.DWG PLOT DATE: 5/21/2024 10:10 AM CAD USER: CHRISTOPHER RESOP
COP1.png

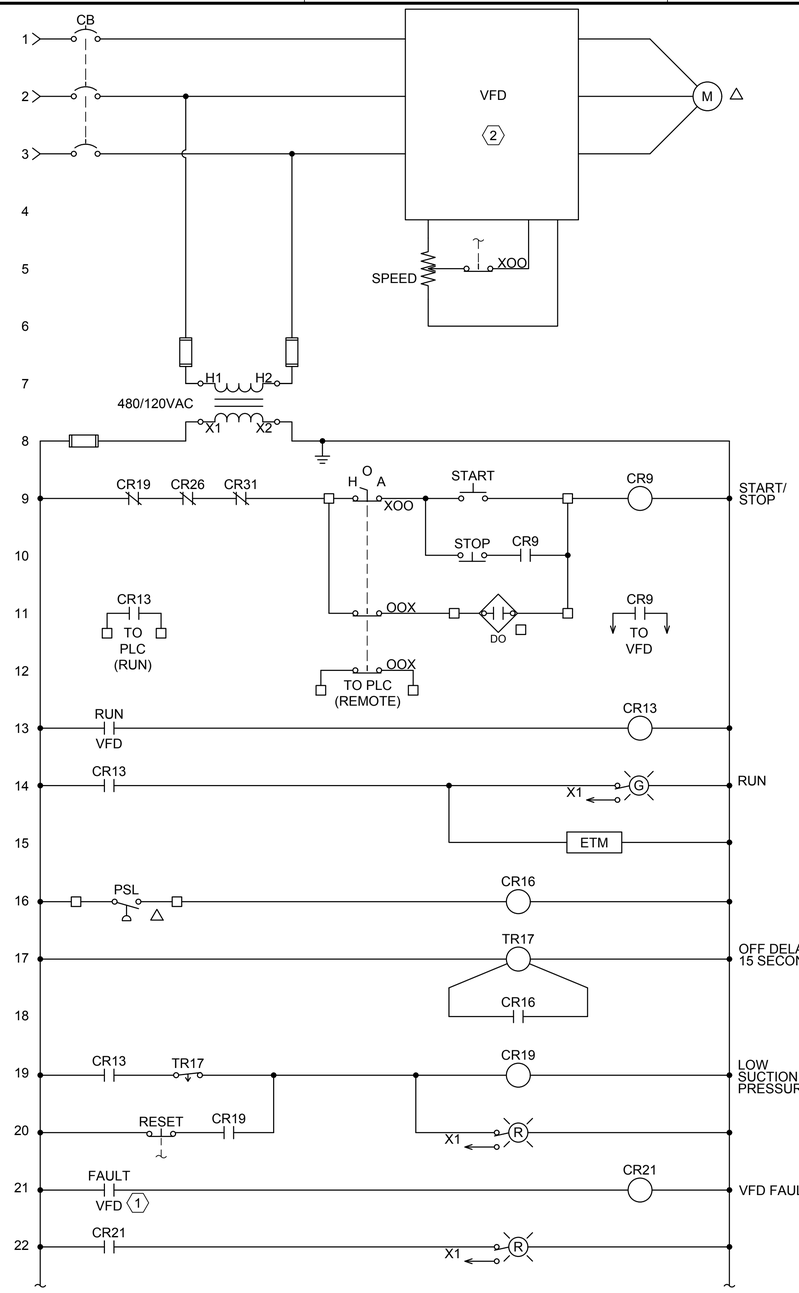

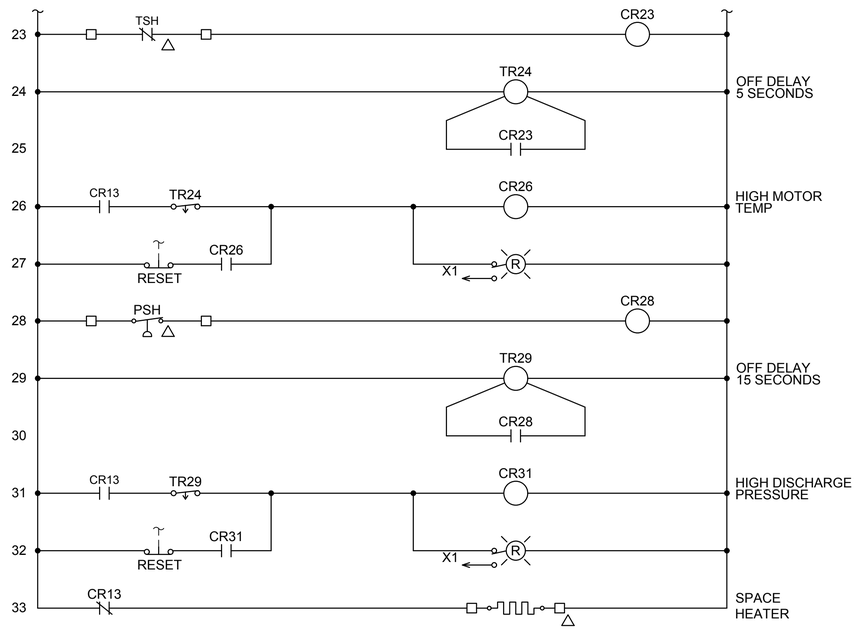

SCHEDULE		
VFD	PMP	EQUIPMENT
VFD3110	P3110	BOOSTER PUMP 1
VFD3120	P3120	BOOSTER PUMP 2
VFD3130	P3130	BOOSTER PUMP 3
VFD3140	P3140	BOOSTER PUMP 4
VFD3150	P3150	JOCKEY PUMP 1

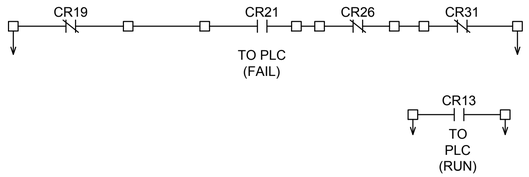

DETAIL G / E-601

GENERAL NOTES

1. VFD: SPECIFICATION 26 29 23.
2. ALL COMPONENTS LOCATED IN VFD UNLESS DENOTED OTHERWISE.
3. PROVIDE VFD KEYPAD, PILOTS, SELECTORS, AND PUSHBUTTONS ON FRONT OF ENCLOSURE.
4. SPEED CONTROL IN REMOTE: 4-20MA INPUT.
5. SPEED FEEDBACK TO SCADA: 4-20MA.
6. ETHERNET PORT REQUIRED FOR FUTURE USE, NOT SHOWN.
7. PROVIDE ADDITIONAL NAMEPLATE NEAR H-O-A SELECTOR: "OPERATE ONLY 3 DUTY BOOSTER PUMPS ON STANDBY POWER AT ONE TIME".

KEY NOTES

1. VFD FAULT CONTACTS OPEN WHEN DRIVE FAULTS OR DISCONNECT IS OPENED
2. 18 PULSE TRANSFORMER REQUIRED, NOT SHOWN

LEGEND

- □ AT PLC
- △ FIELD MOUNTED

Brown AND Caldwell
2 N CENTRAL AVE
SUITE 1600
PHOENIX, AZ 85004

FOR CONSTRUCTION



CITY OF PRESCOTT
ARIZONA

ZONE 41 MINGUS PUMP STATION, TANK AND PIPELINE

REVISIONS

REV	DATE	DESCRIPTION

LINE IS 2 INCHES AT FULL SIZE

DESIGNED:	FRF
DRAWN:	CJR
CHECKED:	KWC
CHECKED:	HWP
APPROVED:	TCM

FILENAME
152624-E-605.DWG

BC PROJECT NUMBER
152624

CLIENT PROJECT NUMBER
17-009

ELECTRICAL

SCHEMATIC DIAGRAMS - BOOSTER PUMPS

DRAWING NUMBER

E-605

SHEET NUMBER
72 OF 84

Path: C:\BGPWD0474241 FILENAME: 152624-E-605.DWG PLOT DATE: 7/27/2022 11:54 AM CAD USER: CHRISTOPHER RESOP
COP1.png

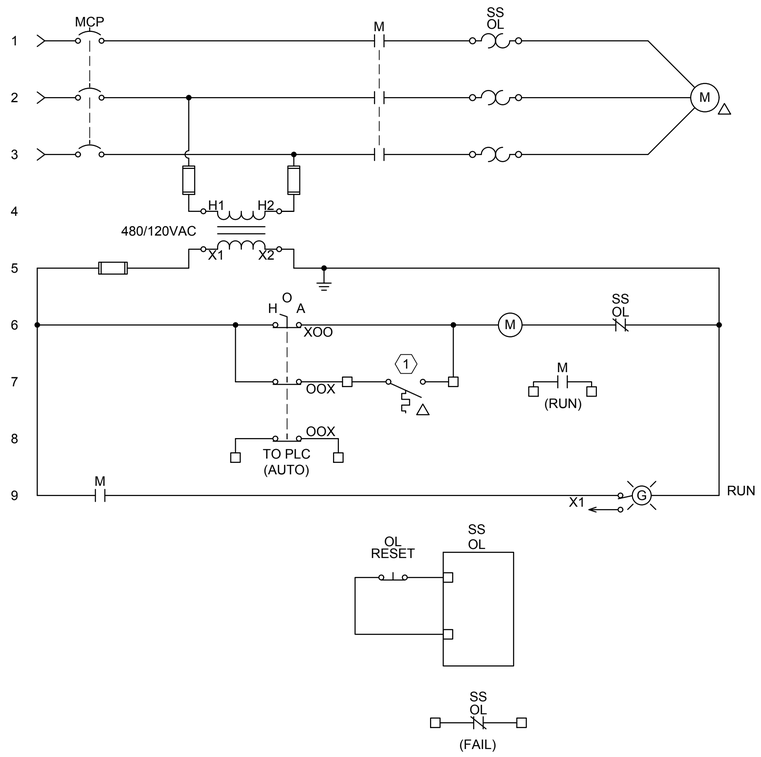

SCHEDULE		
LCP	FAN	EQUIPMENT
LCP3182	FAN3182	EXHAUST FAN 1
LCP3183	FAN3183	EXHAUST FAN 2

DETAIL H / E-601

GENERAL NOTES

1. FAN CONTROLLERS: SPECIFICATION 26 29 13.

KEY NOTES

(1) THERMOSTAT, NEMA 4

LEGEND

- □ AT PLC
- △ FIELD MOUNTED

Brown AND Caldwell
2 N CENTRAL AVE
SUITE 1600
PHOENIX, AZ 85004

FOR CONSTRUCTION



CITY OF PRESCOTT
ARIZONA

ZONE 41 MINGUS PUMP STATION, TANK AND PIPELINE

REVISIONS

REV	DATE	DESCRIPTION

LINE IS 2 INCHES AT FULL SIZE

DESIGNED: FRF
DRAWN: CJR
CHECKED: KWC
CHECKED: HWP
APPROVED: TCM

FILENAME
152624-E-606.DWG
BC PROJECT NUMBER
152624
CLIENT PROJECT NUMBER
17-009

ELECTRICAL

SCHEMATIC DIAGRAMS - MISCELLANEOUS

DRAWING NUMBER
E-606

SHEET NUMBER
73 OF 84

Path: C:\BCPW\D0474241 FILENAME: 152624-E-606.DWG PLOT DATE: 7/27/2022 11:54 AM CAD USER: CHRISTOPHER RESOP
COP1.png

SINGLE PHASE PANEL: MINGUS TANK (WTK_24) PANEL A

VOLTAGE, PHASE, & WIRE:	120 / 240	VAC, 1 PHASE, 3 WIRE	LOCATION:		MINGUS TANK
BUS SIZE:	100	AMPERE	ENCLOSURE:		NEMA-3R
MAIN SIZE:	60	AMPERE	MOUNTING:		POLE MOUNTED
MAIN TYPE:	YES	CIRCUIT BREAKER	BUS BRACING:		10 K AIC
BREAKER TYPE:	NO	BOLT-ON	FED FROM:		POWER UTILITY

CIRCUIT TITLE / LOAD DESCRIPTION	AWG WIRE SIZE	RACE-WAY SIZE	BREAKER CKT NO.	BREAKER AMP	BREAKER POLE	LOAD (VA) PHASE A	LOAD (VA) PHASE B	LOAD (VA) PHASE B	LOAD (VA) PHASE A	BREAKER POLE	BREAKER AMP	BREAKER CKT NO.	AWG WIRE SIZE	RACE-WAY SIZE	CIRCUIT TITLE / LOAD DESCRIPTION
SPARE			1	20	1				400	1	20	2	2#12, #12G	3/4"	MINGUS TANK RTU24
SCADA RADIO REPEATER	2#12, #12G	3/4"	3	20	1		180			1	20	4			SPARE
SPARE			5	20	1					2	30	6	MFR.	-	SURGE PROTECTOR
SPARE			7	20	1							8			
	COLUMN	TOTALS:				0	180	0	400						

PHASE-A LOAD (VA): 400
PHASE-B LOAD (VA): 180

PROVIDE CIRCUIT BREAKER SIZE AS REQUIRED BY SURGE PROTECTOR MFR.

TOTAL LOAD (VA)= 580 I (amp) 2.4

NOTE: SELECT FORMULA VOLTAGE
I (amp) = VA / (240 VAC)

DETAIL K / E-411

SCALE: NONE

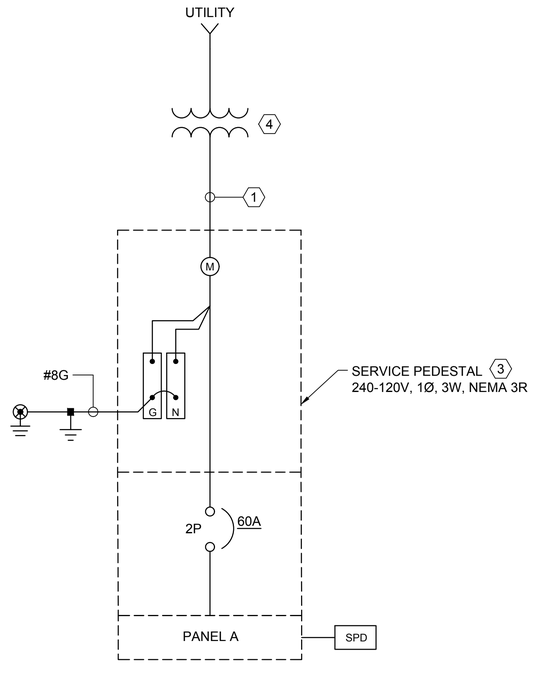

DETAIL J / E-411

SCALE: NONE

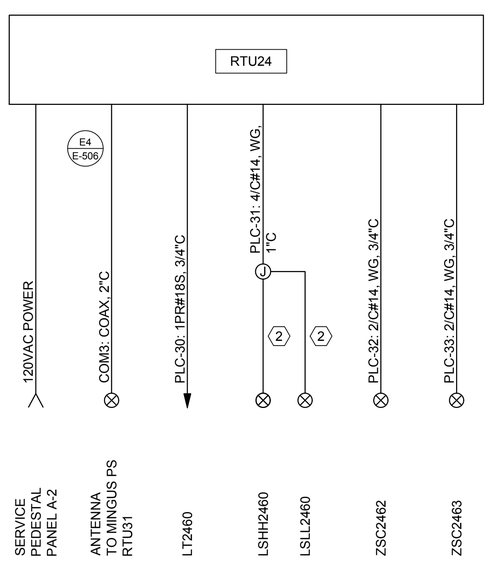

DETAIL M / E-411

SCALE: NONE

GENERAL NOTES

1. CIRCUIT IDENTIFICATIONS AND ABBREVIATIONS DRAWING E-001.
2. CONTROL CABLES: MULTI-CONDUCTOR PER SPECIFICATION 26 05 19.
3. SHIELDED CABLE TERMINATIONS PER I0501.
4. PROVIDE AND COORDINATE RTU AND RADIOS PER CITY OF PRESCOTT SCADA PROJECT GUIDELINES.
5. SITE PLAN: DRAWING E-411
6. P&ID: DRAWING I-611

KEY NOTES

1. SES-B: 3/C#4, #8G, 1-1/2"C
2. MANUFACTURER CABLE
3. PROVIDE COMBINATION SERVICE PEDESTAL AND RISER PER APS SERVICE GUIDELINES.
4. POLE MOUNTED UTILITY TRANSFORMER TO BE SIZED AND PROVIDED BY APS.

Brown AND Caldwell
2 N CENTRAL AVE
SUITE 1600
PHOENIX, AZ 85004

FOR CONSTRUCTION

Arizona Professional Engineer CERTIFICATE NO. 36697 KENNETH W. CHANDLER Date Signed 03/14/22 ARIZONA, U.S.A.

CITY OF PRESCOTT ARIZONA

ZONE 41 MINGUS PUMP STATION, TANK AND PIPELINE

REVISIONS

REV	DATE	DESCRIPTION

LINE IS 2 INCHES AT FULL SIZE

DESIGNED:	FRF
DRAWN:	CJR
CHECKED:	KWC
CHECKED:	HWP
APPROVED:	TCM

FILENAME
152624-E-611.DWG

BC PROJECT NUMBER
152624

CLIENT PROJECT NUMBER
17-009

ELECTRICAL

TANK SINGLE LINE DIAGRAM AND SCHEDULES

DRAWING NUMBER

E-611

SHEET NUMBER
74 OF 84

Path: C:\BCPW\D0474241 FILENAME: 152624-E-611.DWG PLOT DATE: 7/27/2022 11:54 AM CAD USER: CHRISTOPHER RESOP
COP1.png

FUNCTIONAL IDENTIFICATION

VARIABLE	MEASURED OR INITIATING VARIABLE DESCRIPTION	MODIFIER	READOUT OR PASSIVE FUNCTION	OUTPUT FUNCTION	MODIFIER
A	ANALYSIS		ALARM		
B	BURNER, COMBUSTION				
C	CONDUCTIVITY			CONTROL	CLOSE
D	DENSITY, SPECIFIC GRAVITY	DIFFERENTIAL			DEVIATION
E	VOLTAGE, SOLENOID		PRIMARY ELEMENT		
F	FLOW, FLOW RATE	RATIO			
G	FIRE, SMOKE		GLASS		
H	HAND				HIGH
I	CURRENT		INDICATE		
J	POWER		SCAN		
K	TIME, SCHEDULE	TIME RATE OF CHANGE		CONTROL STATION	
L	LEVEL		LIGHT		LOW
M	MOISTURE, HUMIDITY, MOTION	MOMENTARY			MIDDLE, INTERMEDIATE
N	EQUIPMENT STATUS				
O	DISSOLVED OXYGEN		ORIFICE		OPEN
P	PRESSURE, VACUUM		POINT (TEST) CONNECTION		
Q	QUANTITY	INTEGRATE, TOTALIZE			
R	RADIATION		RECORD		RUN
S	SPEED, FREQUENCY	SAFETY		SWITCH	STOP
T	TEMPERATURE			TRANSMIT	
U	MULTIVARIABLE		MULTIFUNCTION	MULTIFUNCTION	MULTIFUNCTION
V	VIBRATION, MECHANICAL ANALYSIS			VALVE, DAMPER, LOUVER	
W	WEIGHT, FORCE, TORQUE		WELL, PROBE		
X	UNCLASSIFIED	X AXIS			
Y	EVENT, STATE OR PRESENCE	Y AXIS		AUXILIARY DEVICES	
Z	POSITION, DIMENSION	Z AXIS		DRIVER, ACTUATOR, FINAL CONTROL ELEMENT	

INSTRUMENT TAG AND LOOP IDENTIFICATION

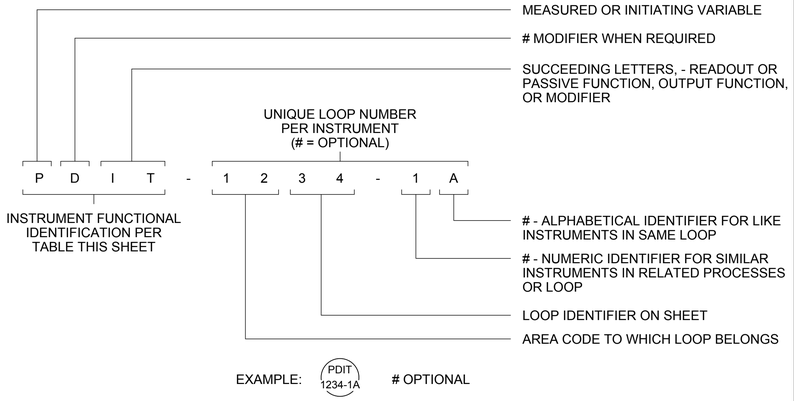

EQUIPMENT IDENTIFICATION SYSTEM

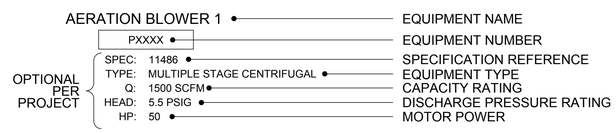

INSTRUMENT SIGNAL LINES

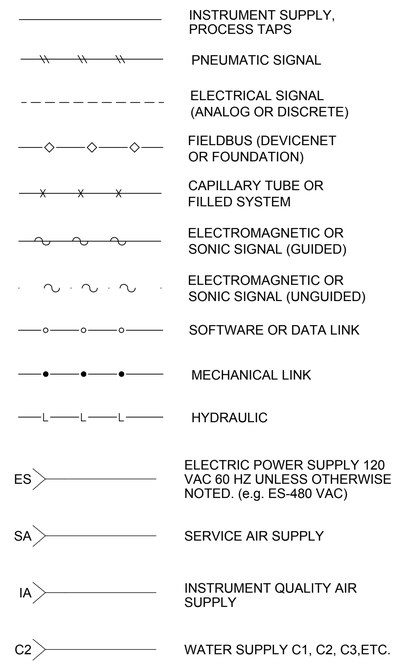

TYPICAL INSTRUMENT IDENTIFICATION

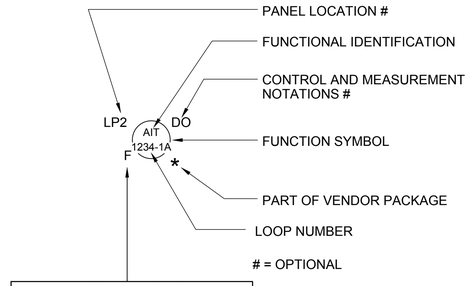

NETWORK TYPE	
F	FOUNDATION FIELDBUS
D	DEVICENET
E	ETHERNET
P	PROFIBUS
PN	PROFINET
M-RTU	MODBUS RTU
M-TCP	MODBUS TCP
CIP	CONTROL INDUSTRIAL PROTOCOL
E-SNMP	SIMPLE NETWORK MANAGEMENT PROTOCOL

PROCESS AND SIGNAL CROSS REFERENCE SYSTEM

WHEN A PROCESS LINE CROSSES FROM DRAWING TO DRAWING. THE P&ID DRAWING NUMBERS NEED TO BE REFERENCED. AS AN EXAMPLE; A PROCESS IS PUMPING TO A TANK ON A SEPARATE P&ID, SEE BELOW

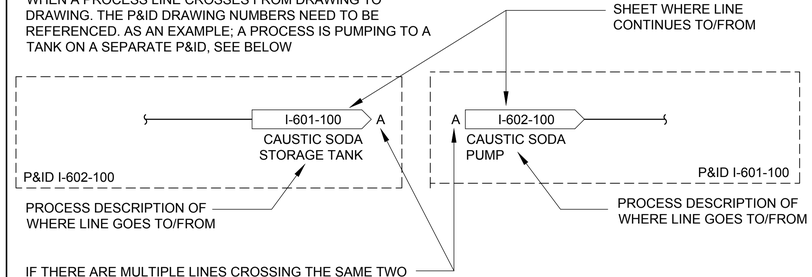

PROCESS LINES

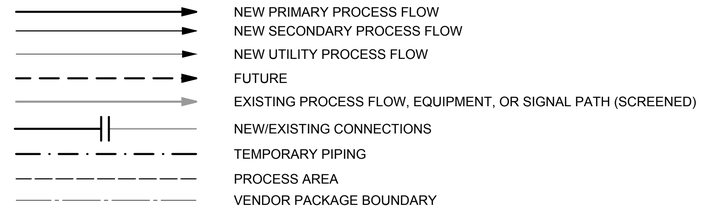

CONTROL AND MEASUREMENT NOTATIONS

ACK	ACKNOWLEDGE
AM	AUTO/MAN
BYP	BYPASS
CL	CLOSE
CL2	CHLORINE
CMAT	COMPUTER/MANUAL/AUTO/TRACKING
COMB	COMBUSTIBLE GAS
CP	CONTROL POWER
COND	CONDUCTIVITY
DEC	DECREASE
DO	DISSOLVED OXYGEN
ESP	EMERGENCY STOP
FWD	FORWARD
F/R	FORWARD/REVERSE
F/S	FAST/SLOW
HLOA	HIGH/LOW/OFF/AUTO
HOA	HAND/OFF/AUTO
HOAL	HAND/OFF/AUTO/LOCAL
HOR	HAND/OFF/REMOTE
INC	INCREASE
JOA	JOG/OFF/AUTO
LL	LEAD/LAG
LOR	LOCAL/OFF/REMOTE
LOS	LOCKOUT STOP
L/R	LOCAL/REMOTE
M/A LS	MAN/AUTO LOADING STATION
OCA	OPEN/CLOSE/AUTO
OCP	PURGE VALVE OP/CL/PC
OL	OVERLOAD
OP	OPEN
OSC/LP	OPEN/STOP/CLOSE WITH LOCAL/REMOTE SELECT
PA	PAUSE
PAL	LOW PRESSURE
PB	PUSH BUTTON
pH	pH
POT	POTENTIOMETER
RDY	READY
REV	REVERSE
RNG	RUNNING
ROF	REVERSE/OFF/FORWARD
RST	RESET
SO2	SULFUR DIOXIDE
SP	STOP
ST	START
TCP	TEST/CLOSE/PC
T/S	TEST/NORMAL/SILENCE
TBL	TROUBLE

GENERAL NOTES:

1. THIS DRAWING IS GENERAL IN NATURE. SOME SYMBOLS AND IDENTIFICATIONS SHOWN HEREON MAY NOT BE USED ON THE CONTRACT DRAWINGS.
2. SYMBOLS ARE ARRANGED ON SPECIFIC DRAWINGS AND IN CATEGORIES FOR CONVENIENCE ONLY; SYMBOLS MAY BE USED ON ANY OF THE CONTRACT DRAWINGS.

Brown AND Caldwell
2 N CENTRAL AVE
SUITE 1600
PHOENIX, AZ 852004

FOR CONSTRUCTION



CITY OF PRESCOTT
ARIZONA

ZONE 41 MINGUS PUMP STATION, TANK AND PIPELINE

REVISIONS		
REV	DATE	DESCRIPTION

LINE IS 2 INCHES AT FULL SIZE

DESIGNED:	FRF
DRAWN:	CJR
CHECKED:	KWC
CHECKED:	HWP
APPROVED:	TCM

FILENAME 152624-I-001.DWG
BC PROJECT NUMBER 152624
CLIENT PROJECT NUMBER 2018-219

INSTRUMENTATION

LEGENDS AND SYMBOLS - 1

DRAWING NUMBER
I-001
SHEET NUMBER
75 OF 84

Path: \\BCPHXFP01\PROJECTS\PRESCOTT, CITY OF\152624 - ZONE 41 PS TANK AND WATERLINE\DRAWINGS\WW\2-SHEETS\I-INSTRUMENTATION\152624 - ZONE 41 PS V15PID.DWG FILENAME: 152624-I-001.DWG PLOT DATE: 1/27/2022 11:13 AM CAD USER: CHRISTOPHER RESOP

MISCELLANEOUS SYMBOLS

- MCC (MOTOR CONTROL/STARTER)
- PURGE OR FLUSHING DEVICE
- RESET FOR LATCH-TYPE OPERATOR
- SEAL WATER CONTROL UNIT
- INTERLOCKING OR CONTROL FUNCTION
- INTRINSIC SAFETY BARRIER
- DISCRETE INPUT
- DISCRETE OUTPUT
- ANALOG INPUT
- ANALOG OUTPUT
- CAMERA (CCTV)
- VFD — VARIABLE FREQUENCY DRIVE
- VSD — VARIABLE SPEED DRIVE

ACTUATORS/MOTORS/POWER

- ASD — ADJUSTABLE SPEED DRIVE (MECHANICAL)
- ROTARY PISTON ACTUATORS, VALVE OR GATE
- LINEAR PISTON ACTUATORS, VALVE OR GATE
- SOLENOID ACTUATOR, VALVE
- MANUAL OR HAND ACTUATOR, VALVE OR GATE (OR BLANK)
- MOTOR (ACTUATOR, VALVE , GATE OR EQUIPMENT)
- ENGINE
- EJECTOR, PNEUMATIC
- GENERATOR

PRIMARY ELEMENT SYMBOLS

- ORIFICE PLATE
- VENTURI OR FLOW TUBE
- NOZZLE FLOW
- PITOT TUBE
- PROPELLER OR TURBINE METER
- FLUME
- WEIR
- VARIABLE AREA FLOW INDICATOR (ROTAMETER) — OR — FI
- DIAPHRAGM SEAL
- IN-LINE ANNULAR SEAL
- MAGNETIC FLOWMETER
- SONIC FLOWMETER (DOPPLER OR TRANSIT TIME)
- POSITIVE DISPLACEMENT METER
- THERMAL FLOW ELEMENT
- VORTEX FLOW ELEMENT
- CORIOLIS FLOW ELEMENT
- FLOAT LEVEL ELEMENT
- ULTRASONIC LEVEL ELEMENT
- BUBBLER LEVEL TUBE
- SUBMERSIBLE LEVEL TRANSMITTER
- HYDROSTATIC LEVEL PROBE
- RADAR OR ULTRASONIC LEVEL ELEMENT
- ANNUBAR, PITOT TUBE
- AVERAGING PITOT TUBE

VALVES

NORMALLY OPEN		NORMALLY CLOSED
	GATE VALVE	
	PLUG VALVE	
	BALL VALVE	
	GLOBE VALVE	
	NEEDLE VALVE	
	KNIFE GATE VALVE	
	DIAPHRAGM VALVE	
	BUTTERFLY VALVE	
	ANGLE VALVE	
	THREE WAY VALVE	
	FOUR WAY VALVE	
	FLOAT VALVE	
	PINCH VALVE	
	BALANCING COCK	
	THERMOSTATICALLY CONTROLLED VALVE	

- DOUBLE LEAF CHECK VALVE
- CHECK VALVE
- BALL CHECK VALVE
- PUMP DISCHARGE VALVE
- GAUGE OR ROOT VALVE
- PRESSURE AND VACUUM RELIEF VALVE
- VACUUM RELIEF VALVE
- PRESSURE RELIEF VALVE
- IN-LINE SPRING LOADED RELIEF VALVE
- PRESSURE REGULATING VALVE (SELF-CONTAINED)
- BACK PRESSURE REGULATING VALVE (SELF-CONTAINED)
- FUSIBLE LINK

- SOLENOID VALVE
- DIAPHRAGM OPERATED VALVE
- PRESSURE BALANCE OPERATED VALVE
- MOTOR OPERATED VALVE
- MOTOR OPERATED VALVE, MODULATING

NOTE: USE VALVE BODY SYMBOL TO MATCH TYPE OF VALVE.

- PISTON OPERATED VALVE
- TELESCOPING VALVE
- MUD VALVE
- ANTI SIPHON VALVE
- LIFT CHECK VALVE
- BRAIDED FLEX CONNECTOR

FUNCTION SYMBOLS

- SHARED DISPLAY, PROCESS CONTROL SYSTEM
- SOFTWARE FUNCTIONALITY
- FIELD OR PANEL DEVICE

LOCATION AND ACCESSIBILITY MODIFIERS FOR FUNCTION SYMBOLS

- STAND ALONE DEVICE, OPERATOR ACCESSIBLE
- LOCATED ON FRONT OF PANEL OR CONSOLE, OPERATOR ACCESSIBLE
- LOCATED IN REAR OF PANEL OR CONSOLE, OPERATOR INACCESSIBLE

INSTRUMENTATION SYMBOLS

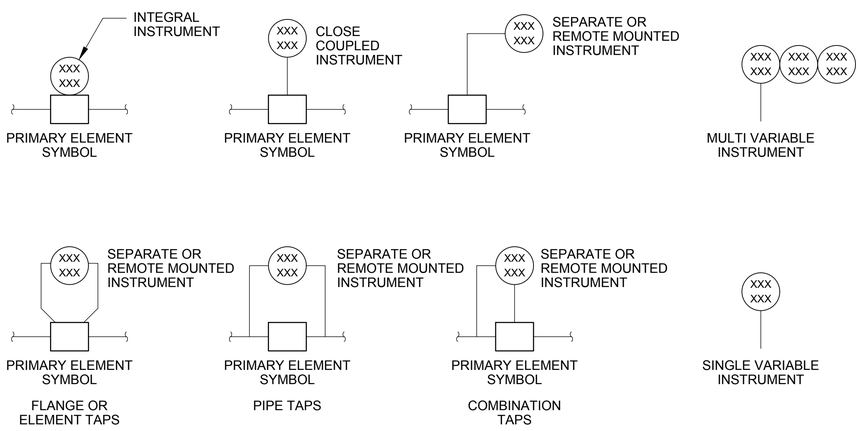

SLIDE AND SLUICE GATES

NORMALLY OPEN		NORMALLY CLOSED
	FLAP GATE	
NO	BUTTERFLY GATE	NC
	STOP GATE	
	SLIDE GATE	
	SLUICE GATE	

GENERAL NOTES:

1. THIS DRAWING IS GENERAL IN NATURE. SOME SYMBOLS AND IDENTIFICATIONS SHOWN HEREON MAY NOT BE USED ON THE CONTRACT DRAWINGS.
2. SYMBOLS ARE ARRANGED ON SPECIFIC DRAWINGS AND IN CATEGORIES FOR CONVENIENCE ONLY; SYMBOLS MAY BE USED ON ANY OF THE CONTRACT DRAWINGS.

Brown AND Caldwell
2 N CENTRAL AVE
SUITE 1600
PHOENIX, AZ 852004

FOR CONSTRUCTION



CITY OF PRESCOTT
ARIZONA

ZONE 41 MINGUS PUMP STATION, TANK AND PIPELINE

REVISIONS		
REV	DATE	DESCRIPTION

LINE IS 2 INCHES AT FULL SIZE

DESIGNED:	FRF
DRAWN:	CJR
CHECKED:	KWC
CHECKED:	HWP
APPROVED:	TCM

FILENAME 152624-I-002.DWG
BC PROJECT NUMBER 152624
CLIENT PROJECT NUMBER 2018-219

INSTRUMENTATION

LEGENDS AND SYMBOLS - 2

DRAWING NUMBER
I-002
SHEET NUMBER 76 OF 84

Path: \\BCPHXFP01\PROJECTS\PRESCOTT, CITY OF\152624 - ZONE 41 PS TANK AND WATERLINE\DRAWINGS\WW\2-SHEETS\I-INSTRUMENTATION\152624 - ZONE 41 PS V15PID.DWG FILENAME: 152624-I-002.DWG PLOT DATE: 1/27/2022 11:13 AM CAD USER: CHRISTOPHER RESOP

PUMPS

- PUMP, CENTRIFUGAL
- PUMP, DIAGHRAGM
- PUMP, GEAR
- PUMP, METERING
- PUMP, PERISTALTIC
- PUMP, PROGRESSING CAVITY
- PUMP, ROTARY LOBE
- PUMP, SUBMERSIBLE
- PUMP, JET
- PUMP, VERTICAL

BLOWERS/COMPRESSORS

- BLOWER OR CENTRIFUGAL FAN
- BLOWER OR COMPRESSOR, LIQUID RING
- BLOWER OR COMPRESSOR, ROTARY LOBE
- COMPRESSOR, ROTARY SCREW
- COMPRESSOR, ROTARY SLIDING VANE
- COMPRESSOR, PISTON

PIPE LINE DEVICES

- TRAP (T)
- SEDIMENT TRAP
- GAS DRIP TRAP (DT)
- SEPARATOR/ DRYER
- PIPELINE FILTER
- RUPTURE DISK (VACUUM RELIEF)
- RUPTURE DISK (PRESSURE RELIEF)
- CONNECTION BETWEEN NEW AND EXISTING PIPING
- UNION
- QUICK CONNECTOR
- CAP OR PLUG
- BLIND FLANGE
- FLEX CONNECTOR
- FABRIC EXPANSION JOINT
- VENT TO ROOF
- VENT
- STEAM VENT
- AUTOMATIC VENT
- MANUAL VENT
- STRAINERS
- FOOT VALVE
- AIR SEPARATOR
- DRAIN (D)
- DRAIN VALVE (DV)
- CALIBRATION CHAMBER
- PULSATION DAMPENER
- INJECTOR
- FLAME TRAP
- FLAME TRAP WITH THERMO SHUTOFF ASSEMBLY
- FLAME CHECK
- SAMPLING AND FLUSHING CONNECTIONS
- SUCTION DIFFUSER
- TEMPERATURE WELL
- FLOW STRAIGHTENING VANES
- PRESSURE REDUCING ASSEMBLY (PRA)
- AMMONIA UNION
- DAMPER
- SIGHT GLASS
- PIG LAUNCHER/ RECEIVER
- REDUCER
- FLEX COUPLING

HVAC RELATED

- FAN, INLINE
- CHILLER
- FILTER OR FILTER-SILENCER INLET AIR
- BOILER
- CHILLER

MIXERS

- MIXER
- DRAFT TUBE MIXER
- MIXER, INLINE STATIC

MISCELLANEOUS

- KEYPAD/DISPLAY
- FLUSHING HYDRANT
- YAGI ANTENNA
- MAGNETIC LEVEL INDICATOR

GENERAL NOTES:

1. THIS DRAWING IS GENERAL IN NATURE. SOME SYMBOLS AND IDENTIFICATIONS SHOWN HEREON MAY NOT BE USED ON THE CONTRACT DRAWINGS.
2. SYMBOLS ARE ARRANGED ON SPECIFIC DRAWINGS AND IN CATEGORIES FOR CONVENIENCE ONLY; SYMBOLS MAY BE USED ON ANY OF THE CONTRACT DRAWINGS.

Brown AND Caldwell
2 N CENTRAL AVE
SUITE 1600
PHOENIX, AZ 852004

FOR CONSTRUCTION

Registered Professional Engineer
CERTIFICATE NO.
35940
KENNETH W. CHANDLER
Date Signed 01/27/22
ARIZONA, U.S.A.

CITY OF PRESCOTT
ARIZONA

ZONE 41 MINGUS PUMP STATION, TANK AND PIPELINE

REVISIONS

REV	DATE	DESCRIPTION

LINE IS 2 INCHES AT FULL SIZE

DESIGNED:	FRF
DRAWN:	CJR
CHECKED:	KWC
CHECKED:	HWP
APPROVED:	TCM

FILENAME
152624-I-003.DWG

BC PROJECT NUMBER
152624

CLIENT PROJECT NUMBER
2018-219

INSTRUMENTATION

LEGENDS AND SYMBOLS - 3

DRAWING NUMBER
I-003

SHEET NUMBER
77 OF 84

Path: \\BCPHXFP01\PROJECTS\PRESCOTT, CITY OF\152624 - ZONE 41 PS V1\PID DWG FILENAME: 152624-I-003.DWG PLOT DATE: 1/27/2022 11:13 AM CAD USER: CHRISTOPHER RESOP

PIPING SYSTEMS

ABBREVIATION	SERVICE
A	AERATION AIR
AA	AGITATION AIR
AFE	AIR FLOTATION EFFLUENT
AL	ALUM
AW	APPLIED WATER
B	BRINE
BA	BACKWASH AIR
BC	BIOFILTER CIRCULATION
BCTL	BOILER CHEMICAL TREATMENT, LOW PRESSURE
BCTM	BOILER CHEMICAL TREATMENT, MEDIUM PRESSURE
BDL	BOILER BLOWDOWN, LOW PRESSURE
BDM	BOILER BLOWDOWN, MEDIUM PRESSURE
BFE	BIOFILTER EFFLUENT
BFL	BIOFILTER FEEDWATER, LOW PRESSURE
BFM	BIOFILTER FEEDWATER, MEDIUM PRESSURE
BW	BACKWASH WATER
CCW	CONDENSER COOLING WATER
CD	CHEMICAL DRAIN
CEN	CENTRATE
CF	CENTRIFUGE FEED
CL	CONDENSATE, LOW PRESSURE
CLG	CHLORINE GAS
CLL	CHLORINE LIQUID
CLS	CHLORINE SOLUTION
CLV	CHLORINE VACUUM
CM	CONDENSATE, MEDIUM PRESSURE
CS	CIRCULATING SLUDGE
CSO	CAUSTIC SODA
CWR	CHILLED WATER RETURN
CWS	CHILLED WATER SUPPLY
D	DRAIN
DIW	DEIONIZED WATER
DS	DIGESTED SLUDGE
DSF	DIESEL FUEL
DSS	SCREENED DIGESTED SLUDGE
DW	DISTILLED WATER
EE	ENGINE EXHAUST
ES	EQUALIZED SLUDGE
F	FLOAT
FA	FOUL AIR
FC	FERRIC CHLORIDE
FLT	FILTRATE
FS	FLOTATION SLUDGE
FW	FILTERED WATER

ABBREVIATION	SERVICE
GAS	GASOLINE
GAV	GAS VAPOR RETURN
GC	GAS CIRCULATION
GR	GRIT
HOH	HIGH PRESSURE HYDRAULIC OIL
HRR	HEAT RESERVOIR RETURN
HRS	HEAT RESERVOIR SUPPLY
HRW	RECIRCULATING POTABLE HOT WATER
HSG	HIGH PRESSURE SLUDGE GAS
HW	POTABLE HOT WATER
HWR	LOW TEMPERATURE HEATING RETURN
HWS	LOW TEMPERATURE HEATING SUPPLY
IA	INSTRUMENT AIR
JWR	JACKET WATER RETURN
JWS	JACKET WATER SUPPLY
LOR	LUBE OIL RETURN
LOS	LUBE OIL SUPPLY
LOW	LUBE OIL WASTE
LSG	LOW PRESSURE SLUDGE GAS
MG	MIXED GAS
ML	MIXED LIQUOR
MS	MIXED SLUDGE
MSG	MEDIUM PRESSURE SLUDGE GAS
MTWR	MEDIUM TEMPERATURE HEATING RETURN
MTWS	MEDIUM TEMPERATURE HEATING SUPPLY
NG	NATURAL GAS
OF	OVERFLOW
OLP	OXYGEN LOW PRESSURE
PD	PUMPED DRAINAGE
PE	PRIMARY EFFLUENT
POL	POLYMER
PS	PRIMARY SLUDGE
PSC	PRIMARY SCUM
RAS	RETURN ACTIVATED SLUDGE
RS	RAW SEWAGE
RW	RAW WATER
RWP	RAINWATER PIPE
RWR	RECLAIMED WATER
SA	SERVICE AIR
SCR	STEAM CLEAN RINSE

ABBREVIATION	SERVICE
SCR	STEAM CLEAN RINSE
SCS	STEAM CLEAN SUPPLY
SD	SANITARY DRAIN
SDG	SULFUR DIOXIDE GAS
SDL	SULFUR DIOXIDE LIQUID
SDS	SULFUR DIOXIDE SOLUTION
SDV	SULPHUR DIOXIDE VACUUM
SE	SECONDARY EFFLUENT
SEP	SEPTAGE
SN	SUPERNATANT
SS	SECONDARY SLUDGE
SSC	SECONDARY SCUM
STA	STARTING AIR
STD	STORM DRAIN
STML	STEAM, LOW PRESSURE
STMM	STEAM, MEDIUM PRESSURE
TD	TANK DRAIN
TE	THICKENER EFFLUENT
THS	THICKENED SLUDGE
TO	THICKENER OVERFLOW
TS	TRANSFER SLUDGE
TSC	THICKENED SCUM
TWAS	THICKENED WASTE ACTIVATED SLUDGE
V	VENT
VA	VACUUM
VC	CHEMICAL VENT
VP	PETROLEUM VENT
VSL	STEAM VENT, LOW PRESSURE
VSM	STEAM VENT, MEDIUM PRESSURE
W	WATER
WAS	WASTE ACTIVATED SLUDGE
WML	WASTE MIXED LIQUOR
1W	POTABLE WATER (CITY WATER)
1WS	POTABLE SOFT WATER
2W	NONPOTABLE CITY WATER
2WHP	NO. 2 WATER HIGH PRESSURE
2WL	LANDSCAPE IRRIGATION
2WS	SOFTENED NONPOTABLE CITY WATER
3W	NO.3 WATER (SECONDARY EFFLUENT)
3WHP	NO. 3 WATER HIGH PRESSURE
3WLC	NO. 3 WATER LOW PRESSURE CHLORINATED
3WLP	NO. 3 WATER LOW PRESSURE
3WS	NO. 3 SPRAY WATER

EQUIPMENT PREFIXES

A	AERATOR	EB	ENGINE BLOWER MODULE	MSP	MOTOR STARTER PANEL	TM	TIMER
ACC	AIR CONDITION COIL	EG	ENGINE GENERATOR MODULE	MUX	MULTIPLEXER	TRS	TRANSFER SWITCH
ACU	AIR CONDITIONING UNIT	EPR	EVAPORATOR	MX	MIXER		
AD	AIR DRYER			MZ	MULTIZONE UNIT	UH	UNIT HEATER
AF	AIR FILTER	F	FAN			US	UTILITY STATION
AHC	AIR HANDLING UNIT W/COIL	FLC	FLOCCULATOR	ORT	ODOR REMOVAL TOWER		
AHU	AIR HANDLING UNIT	FLT	FILTER			VEN	VENTILATOR
ASC	ADJUSTABLE SPEED CONTROL	FP	FILTER PRESS	P	PUMP	VP	VACUUM PUMP
ASD	ADJUSTABLE SPEED DRIVE	FPU	FLUID POWER UNIT	PBD	PANELBOARD, ELECTRICAL		
ATS	AUTOMATIC TRANSFER SWITCH	FUR	FURNACE		LIGHTING	WH	WATER HEATER
					AND BRANCH CIRCUIT	WHR	WASHER
B	BLOWER	GEN	GENERATOR	PC	PROCESS OR PERSONAL	WSR	WATER SOFTENER UNIT
BFP	BELT FILTER PRESS	GDR	GRINDER		COMPUTER		
BLR	BOILER	GT	GATE	PEJ	PNEUMATIC EJECTOR		
BNR	BURNER			PLC	PROGAMMABLE LOGIC		
BP	BACKFLOW PREVENTER	H	HOIST		CONTROLLER		
BSN	BAR SCREEN	HEX	HEAT EXCHANGER	PNL	PANEL		
		HOP	HYDRAULIC OPERATOR	POP	PNEUMATIC OPERATOR		
C	COIL	HP	HEAT PUMP	PVL	PRESSURE VESSEL		
CDR	CONDENSOR	HPU	HYDRAULIC POWER UNIT				
CFR	CHEMICAL FEEDER	HTR	HEATER	REC	RECEIVER		
CHR	CHILLER	HTT	HEAT TRACER TAPE				
COL	COLLECTOR	HV	HAND OPERATED VALVE	SCN	SCREEN (BAR, ETC.)		
COM	COMMINUTOR			SCR	SCRUBBER		
CON	CONVEYOR	INJ	INJECTOR	SEP	SEPARATOR		
CP	COMPRESSOR			SLR	SILENCER		
CRN	CRANE	LVR	LOUVER	SMP	SAMPLER		
CTF	CENTRIFUGE			SS	SAND SEPARATOR		
CV	CONTROL VALVE	M	MOTOR	ST	STEAM TRAP		
CYL	CYLINDER	MCC	MOTOR CONTROL CENTER	SUB	SUBSTATION		
		MEE	MISCELLANEOUS ELECTRICAL	SWBD	SWITCHBOARD		
DIS	DISTRIBUTOR		EQUIPMENT	SWGR	SWITCHGEAR		
DPR	DAMPER	MIE	MISCELLANEOUS				
DS	DISCONNECT SWITCH		INSTRUMENTATION EQUIPMENT	T	TANK		
DU	DRIVE UNIT	MME	MISCELLANEOUS MECHANICAL	TBN	TURBINE		
			EQUIPMENT	TCV	TEMPERATURE CONTROL VALVE		
E	ENGINE	MOP	MOTOR OPERATOR	TFR	TRANSFORMER		

GENERAL NOTES:

1. THIS DRAWING IS GENERAL IN NATURE. SOME SYMBOLS AND IDENTIFICATIONS SHOWN HEREON MAY NOT BE USED ON THE CONTRACT DRAWINGS.
2. SYMBOLS ARE ARRANGED ON SPECIFIC DRAWINGS AND IN CATEGORIES FOR CONVENIENCE ONLY; SYMBOLS MAY BE USED ON ANY OF THE CONTRACT DRAWINGS.

Brown AND Caldwell
2 N CENTRAL AVE
SUITE 1600
PHOENIX, AZ 852004

FOR CONSTRUCTION

Registered Professional Engineer
CERTIFICATE NO.
35940
KENNETH W. CHANDLER
Date Signed 01/27/22
ARIZONA, U.S.A.

CITY OF PRESCOTT
ARIZONA

ZONE 41 MINGUS PUMP STATION, TANK AND PIPELINE

REVISIONS

REV	DATE	DESCRIPTION

LINE IS 2 INCHES AT FULL SIZE

DESIGNED:	FRF
DRAWN:	CJR
CHECKED:	KWC
CHECKED:	HWP
APPROVED:	TCM

FILENAME
152624-I-004.DWG
BC PROJECT NUMBER
152624
CLIENT PROJECT NUMBER
2018-219

INSTRUMENTATION ABBREVIATIONS

DRAWING NUMBER
I-004
SHEET NUMBER
78 OF 84

Path: \\BCPHXFP01\PROJECTS\PRESCOTT, CITY OF\152624 - ZONE 41 PS TANK AND WATERLINE\DRAWINGS\WW2-SHEETS\I-INSTRUMENTATION\152624 - ZONE 41 PS V15PID.DWG FILENAME: 152624-I-004.DWG PLOT DATE: 1/27/2022 11:13 AM CAD USER: CHRISTOPHER RESOP

SUPERVISORY LEVEL

WIRELESS I/O

30"W
-
ZONE 0 RESERVOIRS

30"W
-
CHINO RESERVOIR

30"W 30"x24" 24"x18" 24"W
I-602
ZONE 41 MINGUS PUMPS

Brown AND Caldwell
2 N CENTRAL AVE
SUITE 1600
PHOENIX, AZ 852004

FOR CONSTRUCTION

Registered Professional Engineer
CERTIFICATE NO.
35940
KENNETH W.
CHANDLER
Date Signed 01/27/22
ARIZONA, U.S.A.

CITY OF PRESCOTT
ARIZONA

ZONE 41 MINGUS PUMP STATION, TANK AND PIPELINE

REVISIONS

REV	DATE	DESCRIPTION

LINE IS 2 INCHES
AT FULL SIZE

DESIGNED:	FRF
DRAWN:	CJR
CHECKED:	KWC
CHECKED:	HWP
APPROVED:	TCM

FILENAME
152624-I-601.DWG
BC PROJECT NUMBER
152624
CLIENT PROJECT NUMBER
2018-219

INSTRUMENTATION

ZONE 0 PARTIAL - PROCESS AND INSTRUMENTATION DIAGRAM

DRAWING NUMBER

I-601

SHEET NUMBER
79 OF 84

Path: \\BCPHXFP01\PROJECTS\PRESCOTT, CITY OF\152624 - ZONE 41 PS TANK AND WATERLINE\DRAWINGS\WW2-SHEETS\I-INSTRUMENTATION\152624 - ZONE 41 PS V15\PID.DWG FILENAME: 152624-I-601.DWG PLOT DATE: 1/27/2022 11:13 AM CAD USER: CHRISTOPHER RESOP

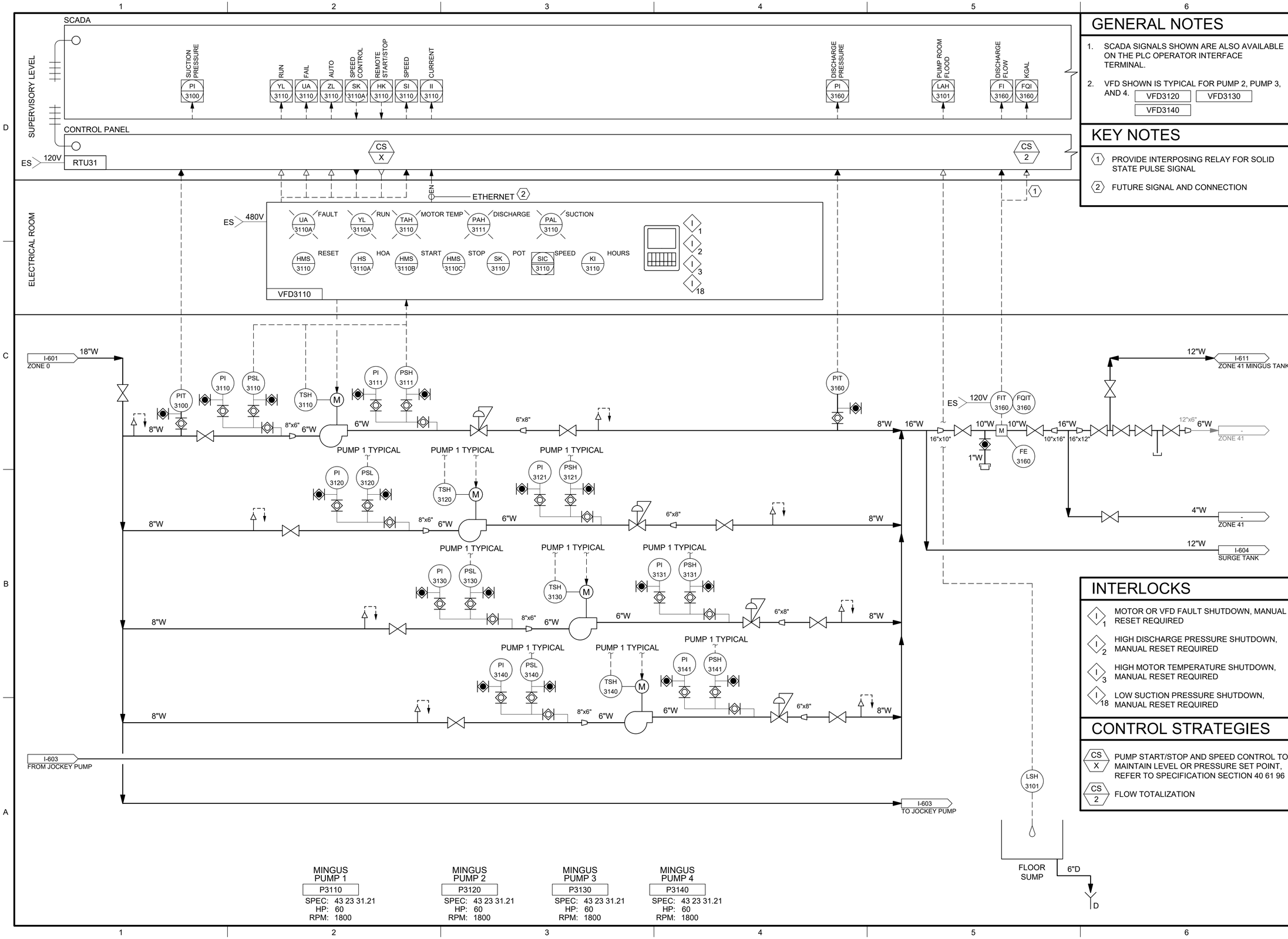

GENERAL NOTES

1. SCADA SIGNALS SHOWN ARE ALSO AVAILABLE ON THE PLC OPERATOR INTERFACE TERMINAL.
2. VFD SHOWN IS TYPICAL FOR PUMP 2, PUMP 3, AND 4. VFD3120 VFD3130 VFD3140

KEY NOTES

1. PROVIDE INTERPOSING RELAY FOR SOLID STATE PULSE SIGNAL
2. FUTURE SIGNAL AND CONNECTION

INTERLOCKS

- I 1 — MOTOR OR VFD FAULT SHUTDOWN, MANUAL RESET REQUIRED
- I 2 — HIGH DISCHARGE PRESSURE SHUTDOWN, MANUAL RESET REQUIRED
- I 3 — HIGH MOTOR TEMPERATURE SHUTDOWN, MANUAL RESET REQUIRED
- I 18 — LOW SUCTION PRESSURE SHUTDOWN, MANUAL RESET REQUIRED

CONTROL STRATEGIES

- CS X — PUMP START/STOP AND SPEED CONTROL TO MAINTAIN LEVEL OR PRESSURE SET POINT, REFER TO SPECIFICATION SECTION 40 61 96
- CS 2 — FLOW TOTALIZATION

Brown AND Caldwell
2 N CENTRAL AVE
SUITE 1600
PHOENIX, AZ 852004

FOR CONSTRUCTION

CERTIFICATE NO. 35940 KENNETH W. CHANDLER Date Signed 03/14/22 ARIZONA, U.S.A.

CITY OF PRESCOTT ARIZONA

ZONE 41 MINGUS PUMP STATION, TANK AND PIPELINE

REVISIONS

REV	DATE	DESCRIPTION

LINE IS 2 INCHES AT FULL SIZE

DESIGNED: FRF
DRAWN: CJR
CHECKED: KWC
CHECKED: HWP
APPROVED: TCM

FILENAME 152624-I-602.DWG
BC PROJECT NUMBER 152624
CLIENT PROJECT NUMBER 2018-219

INSTRUMENTATION

BOOSTER PUMPS - PROCESS AND INSTRUMENTATION DIAGRAM

DRAWING NUMBER
I-602

SHEET NUMBER
80 OF 84

Path: \\BCPHXFP01\PROJECTS\PRESCOTT, CITY OF\152624 - ZONE 41 PS TANK AND WATERLINE\DRAWINGS\WW\2-SHEETS\I-INSTRUMENTATION\152624 - ZONE 41 PS V15\PID.DWG FILENAME: 152624-I-602.DWG PLOT DATE: 3/14/2022 10:50 AM CAD USER: CHRISTOPHER RESOP

Path: \\BOPHXFP01\PROJECTS\PRESCOTT, CITY OF\152624 - ZONE 41 PS TANK AND WATERLINE\DRAWINGS\WW\2-SHEETS\I-INSTRUMENTATION\152624 - ZONE 41 PS V15PID.DWG FILENAME: 152624-I-603.DWG PLOT DATE: 3/14/2022 10:57 AM CAD USER: CHRISTOPHER RESOP



GENERAL NOTES

1. SCADA SIGNALS SHOWN ARE ALSO AVAILABLE ON THE PLC OPERATOR INTERFACE TERMINAL.
2. JOCKEY PUMP CONTROLS AND VFD TYPICAL PER PUMP 1 ON DRAWING I-602.

KEY NOTES

(1) PROVIDE INTERPOSING RELAY FOR SOLID STATE PULSE SIGNAL

(2) FUTURE SIGNAL AND CONNECTION

CONTROL STRATEGIES

CS X — PUMP START/STOP AND SPEED CONTROL TO MAINTAIN LEVEL OR PRESSURE SET POINT, REFER TO SPECIFICATION SECTION 40 61 96

CS 2 — FLOW TOTALIZATION

Brown AND Caldwell
2 N CENTRAL AVE
SUITE 1600
PHOENIX, AZ 852004

FOR CONSTRUCTION

Registered Professional Engineer — CERTIFICATE NO. 35940 — KENNETH W. CHANDLER — Date Signed 03/14/22 — ARIZONA, U.S.A.

CITY OF PRESCOTT ARIZONA

ZONE 41 MINGUS PUMP STATION, TANK AND PIPELINE

REVISIONS		
REV	DATE	DESCRIPTION

LINE IS 2 INCHES AT FULL SIZE

DESIGNED:	FRF
DRAWN:	CJR
CHECKED:	KWC
CHECKED:	HWP
APPROVED:	TCM

FILENAME 152624-I-603.DWG
BC PROJECT NUMBER 152624
CLIENT PROJECT NUMBER 2018-219

INSTRUMENTATION

JOCKEY PUMP - PROCESS AND INSTRUMENTATION DIAGRAM

DRAWING NUMBER

I-603

SHEET NUMBER 81 OF 84

SUPERVISORY LEVEL

SCADA

SURGE TANK LEVEL LI 3181

SURGE TANK LO LO LEVEL LALL 3181

SURGE TANK HI HI LEVEL LAHH 3181A

CONTROL PANEL

RTU31

CS 7

ELECTRICAL ROOM

ES 480V HS 3182 HOA — LCP3182 — T — M

HS 3183 HOA — LCP3183 — T — M — 480V ES

1/2"SA — 3 — V* — 1 — PI 3181 — V*

2

V* — 4

PDIT 3181

2"D

I-602 ZONE 41 MINGUS PUMPS — 12"W

EXHAUST FAN 1 — FAN3182 — SPEC: 23 34 00

EXHAUST FAN 2 — FAN3183 — SPEC: 23 34 00

DISCHARGE SURGE TANK — T3181 — SPEC: 43 42 21

KEY NOTES

1. MANUFACTURER SAFETY VALVE, MANUFACTURER SET
2. HYDROPNEUMATIC TANK VENDOR PACKAGE, SPECIFICATION: 43 42 21
3. CONNECTION FOR AIR COMPRESSOR
4. MAGNETICALLY COUPLED LEVEL GAUGE

CONTROL STRATEGIES

CS 7 — PROCESS ALARMS, MANUAL RESET FROM SCADA REQUIRED

Brown AND Caldwell
2 N CENTRAL AVE
SUITE 1600
PHOENIX, AZ 85004

FOR CONSTRUCTION

Professional Engineer — CERTIFICATE NO. 35940 — KENNETH W. CHANDLER — Date Signed 6/13/25 — ARIZONA, U.S.A.

CITY OF PRESCOTT ARIZONA

ZONE 41 MINGUS PUMP STATION, TANK AND PIPELINE

REVISIONS

REV	DATE	DESCRIPTION

LINE IS 2 INCHES AT FULL SIZE

DESIGNED:	FRF
DRAWN:	CJR
CHECKED:	KWC
CHECKED:	HWP
APPROVED:	TCM

FILENAME 152624-I-604.DWG

BC PROJECT NUMBER 152624

CLIENT PROJECT NUMBER 2018-219

INSTRUMENTATION

SURGE TANK - PROCESS AND INSTRUMENTATION DIAGRAM

DRAWING NUMBER

I-604

SHEET NUMBER

82 OF 84

Path: C:\BCPW\D0474261 FILENAME: 152624-I-604.DWG PLOT DATE: 5/21/2024 10:32 AM CAD USER: CHRISTOPHER RESOP
COP1.png

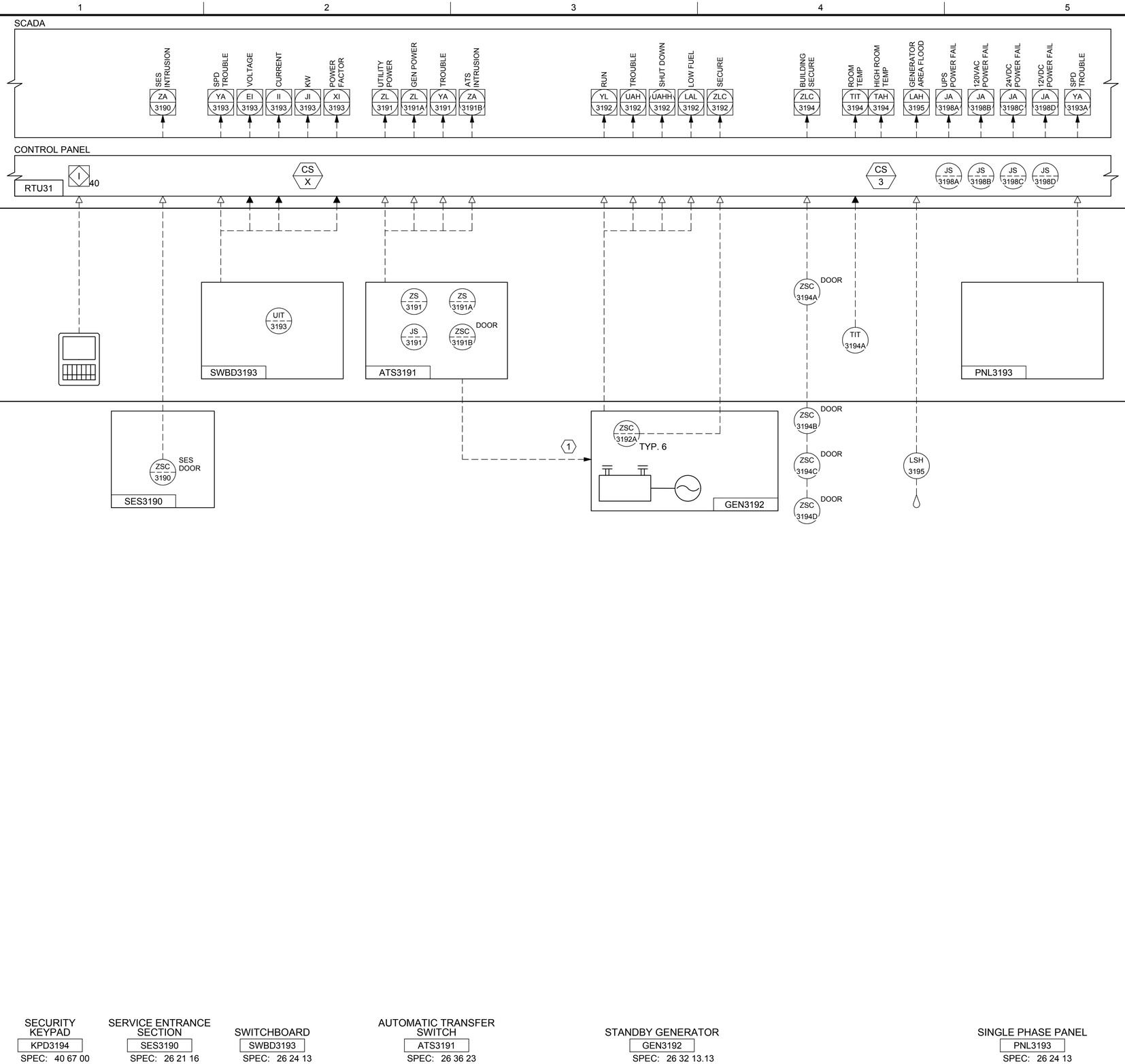

KEY NOTES

1. ATS GENERATOR START COMMAND

INTERLOCKS

I 40 INTRUSION ALARM DISARM FROM KEYPAD FOR ONE HOUR TO ALLOW STAFF TO OPEN DOOR USING DOOR KEY.

CONTROL STRATEGIES

CS 3 PROCESS ALARM(S), SELF-RESETTING

CS X CALCULATED KW BY VOLTAGE, CURRENT, AND POWER FACTOR

SECURITY KEYPAD	SERVICE ENTRANCE SECTION	SWITCHBOARD	AUTOMATIC TRANSFER SWITCH	STANDBY GENERATOR	SINGLE PHASE PANEL
KPD3194	SES3190	SWBD3193	ATS3191	GEN3192	PNL3193
SPEC: 40 67 00	SPEC: 26 21 16	SPEC: 26 24 13	SPEC: 26 36 23	SPEC: 26 32 13.13	SPEC: 26 24 13

Brown AND Caldwell
2 N CENTRAL AVE
SUITE 1600
PHOENIX, AZ 852004

FOR CONSTRUCTION

Registered Professional Engineer
CERTIFICATE NO.
35940
KENNETH W. CHANDLER
Date Signed 1/27/22
ARIZONA, U.S.A.

CITY OF PRESCOTT
ARIZONA

ZONE 41 MINGUS PUMP STATION, TANK AND PIPELINE

REVISIONS		
REV	DATE	DESCRIPTION

LINE IS 2 INCHES AT FULL SIZE

DESIGNED:	FRF
DRAWN:	CJR
CHECKED:	KWC
CHECKED:	HWP
APPROVED:	TCM

FILENAME
152624-I-605.DWG

BC PROJECT NUMBER
152624

CLIENT PROJECT NUMBER
2018-219

INSTRUMENTATION

SUPPORT SYSTEMS - PROCESS AND INSTRUMENTATION DIAGRAM

DRAWING NUMBER

I-605

SHEET NUMBER
83 OF 84

Path: \\BCPHXFP01\PROJECTS\PRESCOTT, CITY OF\152624 - ZONE 41 PS TANK AND WATERLINE\DRAWINGS\WW2-SHEETS\I-INSTRUMENTATION\152624 - ZONE 41 PS V15\PID.DWG FILENAME: 152624-I-605.DWG PLOT DATE: 1/27/2022 11:13 AM CAD USER: CHRISTOPHER RESOP

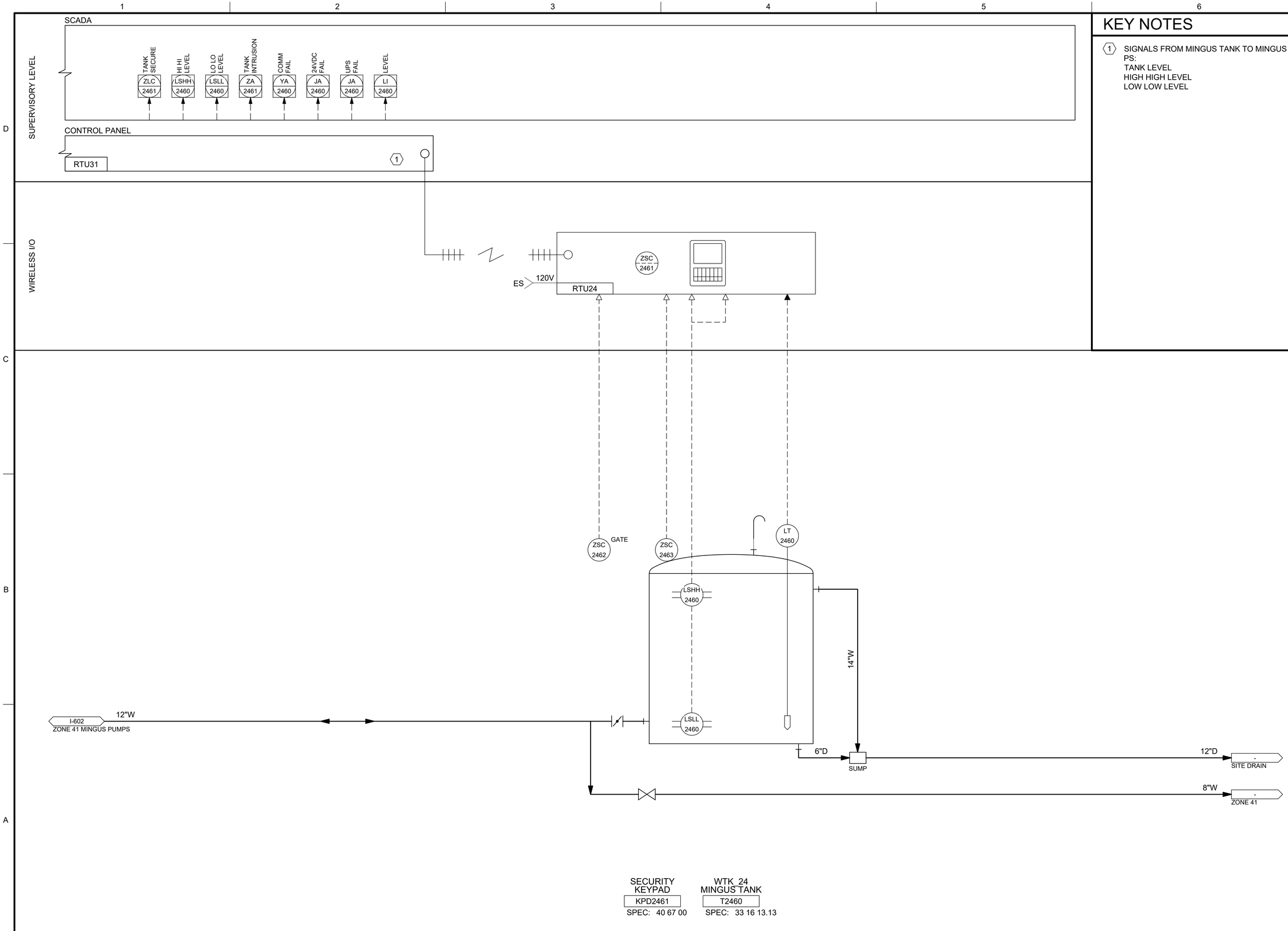

KEY NOTES

1. SIGNALS FROM MINGUS TANK TO MINGUS PS:
   TANK LEVEL
   HIGH HIGH LEVEL
   LOW LOW LEVEL

Brown AND Caldwell
2 N CENTRAL AVE
SUITE 1600
PHOENIX, AZ 852004

FOR CONSTRUCTION

CERTIFICATE NO. 35940
KENNETH W. CHANDLER
Date Signed 03/14/22
ARIZONA, U.S.A.

CITY OF PRESCOTT ARIZONA

ZONE 41 MINGUS PUMP STATION, TANK AND PIPELINE

REVISIONS

REV	DATE	DESCRIPTION

LINE IS 2 INCHES AT FULL SIZE

DESIGNED: FRF
DRAWN: CJR
CHECKED: KWC
CHECKED: HWP
APPROVED: TCM

FILENAME 152624-I-611.DWG
BC PROJECT NUMBER 152624
CLIENT PROJECT NUMBER 2018-219

INSTRUMENTATION

MINGUS TANK - PROCESS AND INSTRUMENTATION DIAGRAM

DRAWING NUMBER
I-611

SHEET NUMBER
84 OF 84

Path: \\BCPHXFP01\PROJECTS\PRESCOTT, CITY OF\152624 - ZONE 41 PS TANK AND WATERLINE\DRAWINGS\WW\2-SHEETS\I-INSTRUMENTATION\152624 - ZONE 41 PS V15\PID DWG FILENAME: 152624-I-611.DWG PLOT DATE: 3/14/2022 11:13 AM CAD USER: CHRISTOPHER RESOP